EUROPEAN STANDARD

NORME EUROPÉENNE

EUROPÄISCHE NORM

DRAFT
prEN 15684

April 2019

ICS 91.190

Will supersede EN 15684:2012

English Version

Building hardware - Mechatronic cylinders - Requirements and test methods

Quincaillerie pour le bâtiment - Cylindres mécatroniques - Exigences et méthodes d'essai

Schlösser und Baubeschläge - Mechatronische Schließzylinder - Anforderungen und Prüfverfahren

This draft European Standard is submitted to CEN members for enquiry. It has been drawn up by the Technical Committee CEN/TC 33.

If this draft becomes a European Standard, CEN members are bound to comply with the CEN/CENELEC Internal Regulations which stipulate the conditions for giving this European Standard the status of a national standard without any alteration.

This draft European Standard was established by CEN in three official versions (English, French, German). A version in any other language made by translation under the responsibility of a CEN member into its own language and notified to the CEN-CENELEC Management Centre has the same status as the official versions.

CEN members are the national standards bodies of Austria, Belgium, Bulgaria, Croatia, Cyprus, Czech Republic, Denmark, Estonia, Finland, Former Yugoslav Republic of Macedonia, France, Germany, Greece, Hungary, Iceland, Ireland, Italy, Latvia, Lithuania, Luxembourg, Malta, Netherlands, Norway, Poland, Portugal, Romania, Serbia, Slovakia, Slovenia, Spain, Sweden, Switzerland, Turkey and United Kingdom.

Recipients of this draft are invited to submit, with their comments, notification of any relevant patent rights of which they are aware and to provide supporting documentation.

Warning : This document is not a European Standard. It is distributed for review and comments. It is subject to change without notice and shall not be referred to as a European Standard.

EUROPEAN COMMITTEE FOR STANDARDIZATION
COMITÉ EUROPÉEN DE NORMALISATION
EUROPÄISCHES KOMITEE FÜR NORMUNG

CEN-CENELEC Management Centre: Rue de la Science 23, B-1040 Brussels

© 2019 CEN All rights of exploitation in any form and by any means reserved worldwide for CEN national Members.

Ref. No. prEN 15684:2019 E

Licensed to: Koole, A.J. Mr.
Downloaded: 2019-05-21
Single user licence only, copying and networking prohibited

Contents

Page

European foreword ... 4

Introduction ... 5

1 Scope ... 6

2 Normative references ... 6

3 Terms and definitions ... 7

4 Requirements ... 9
4.1 General ... 9
4.2 Category of use ... 10
4.3 Durability requirements ... 11
4.4 Fire/smoke resistance ... 11
4.5 Environmental resistance ... 11
4.6 Key related security ... 13
4.7 System management ... 18
4.8 Attack resistance requirements ... 19
4.9 Requirements for product information ... 22

5 Testing, assessment and sampling methods ... 23
5.1 General ... 23
5.2 Operational test ... 23
5.3 Performance tests ... 25
5.4 Category of use ... 25
5.5 Durability tests ... 26
5.6 Fire/smoke resistance tests ... 27
5.7 Environmental resistance tests ... 28
5.8 Key related security ... 30
5.9 System Management ... 31
5.10 Attack resistance tests ... 31

6 Classification system ... 41
6.1 Classification ... 41
6.2 Category of use: (1st character) ... 41
6.3 Durability (2nd character): ... 41
6.4 Fire/smoke resistance (3rd character): ... 41
6.5 Environmental resistance (4th character): ... 41
6.6 Mechanical key related security (5th character): ... 41
6.7 Credential related security (6th character): ... 41
6.8 System Management (7th character): ... 42
6.9 Attack resistance (8th character): ... 42
6.10 Example of classification ... 42

7 Marking ... 42

Annex A (normative) **Suitability for use on fire/smoke resistant doors** ... 43

Annex B (normative) **Tool sets for attack resistance tests** ... 44

Annex C (normative) **Table of test procedures** ... 46

Annex D (informative) **Installation instructions** ... 48

Licensed to: Koole, A.J. Mr.
Downloaded: 2019-05-21
Single user licence only, copying and networking prohibited

Annex E (informative) **Manufacturer's declaration of compliance** **49**
Annex F (informative) **Examples of calculation of effective code variations for ICC**..... **51**
Bibliography **54**

Licensed to: Koole, A.J. Mr.
Downloaded: 2019-05-21
Single user licence only, copying and networking prohibited

European foreword

This document (prEN 15684:2019) has been prepared by Technical Committee CEN/TC 33 “Doors, windows, shutters, building hardware and curtain walling”, the secretariat of which is held by AFNOR.

This document is currently submitted to the CEN Enquiry.

This document will supersede EN 15684:2012.

Licensed to: Koole, A.J. Mr.
Downloaded: 2019-05-21
Single user licence only, copying and networking prohibited

Introduction

Mechanical cylinders have been used to provide security and control of locks. Increasing demand for higher security, flexibility of master key systems, flow control, copy control of keys, etc. have made it desirable to incorporate additional functions to such mechanical cylinders, and new technologies have made it possible to develop electronically controlled cylinders.

Mechanical performance of the mechatronic cylinder is based on EN 1303.

Mechatronic Cylinder can technically be described in three main designs:

— a cylinder with both electrically and mechanically operated locking parts;

— a cylinder with electrically operated locking part and a key for mechanically rotating the plug;

— a cylinder with electrically operated locking part and with manual operated opening/closing function.

Increasingly such Mechatronic Cylinders (MCs) form a part of the security system of a building and may involve the use of electrical locking and controlling elements.

The performance tests incorporated in this European Standard are considered to be reproducible and as such will provide a consistent and objective assessment of the performance of these devices throughout CEN Member States.

It is assumed that MC will conform to the legal regulations, i.e. RED – Radio Equipment Directive 2014/53/EU.

On occasions there may be a need for additional functions within the design of the cylinder. Purchasers should satisfy themselves that the products are suitable for their intended use. This is particularly important when the operation of such additional functions is safety-related. Accordingly, this European Standard includes assessment of such features when they are included in the cylinder design.

In comparison with EN 15684:2012, the following significant changes have been made:

— Classification –Minimum number of codes changed to credential security;

— Classification - attack resistance refers to EN 1303:2015;

— Credential security introduced, with the same principle as in prEN 16867:2018.

Licensed to: Koole, A.J. Mr.
Downloaded: 2019-05-21
Single user licence only, copying and networking prohibited

1 Scope

This document specifies requirements for performance and testing of Mechatronic Cylinders and their keys and/or electronic keys.

It applies to cylinders for such locks designed to be normally used in buildings. It also applies to cylinders for use with other hardware products such as exit devices, door operators, etc. or monitoring facilities and alarm systems.

It establishes categories of use based on performance tests and grades of security based on design requirements and on performance tests that simulate attack.

This document includes assessment of additional features when they are included in the cylinder design.

This document does not cover any other element of a security system, other than those directly involved in the control of a cylinder.

The suitability of cylinders for use on fire or smoke-door assemblies is determined by fire performance tests conducted in addition to the performance testing specified by this document (see Annex A).

2 Normative references

The following documents are referred to in the text in such a way that some or all of their content constitutes requirements of this document. For dated references, only the edition cited applies. For undated references, the latest edition of the referenced document (including any amendments) applies.

EN 636:2003+A1:2015, *Plywood — Specifications*

EN 1303:2015, *Building hardware — Cylinders for locks — Requirements and test methods*

EN 1634-1, *Fire resistance and smoke control tests for door, shutter and openable window assemblies and elements of building hardware — Part 1: Fire resistance tests for doors, shutters and openable windows*

EN 1634-2, *Fire resistance and smoke control tests for door, shutter and openable window assemblies and elements of building hardware — Part 2: Fire resistance characterisation test for elements of building hardware*

EN 1634-3, *Fire resistance and smoke control tests for door and shutter assemblies, openable windows and elements of building hardware — Part 3: Smoke control test for door and shutter assemblies*

EN 1670:2007, *Building hardware — Corrosion resistance — Requirements and test methods*

EN 1906, *Building hardware — Lever handles and knob furniture — Requirements and test methods*

EN 60068-2-1, *Environmental testing — Part 2-1: Tests — Test A: Cold (IEC 60068-2-1)*

EN 60068-2-2, *Environmental testing — Part 2-2: Tests — Test B: Dry heat (IEC 60068-2-2)*

EN 60068-2-6:2008, *Environmental testing — Part 2-6: Tests — Test Fc: Vibration (sinusoidal) (IEC 60068-2-6:2007)*

EN 60068-2-27, *Environmental testing — Part 2-27: Tests – Test Ea and guidance: Shock (IEC 60068-2-27)*

EN 60068-2-30:2005, *Environmental testing — Part 2-30: Tests — Test Db: Damp heat, cyclic (12 h + 12 h cycle) (IEC 60068-2-30:2005)*

Licensed to: Koole, A.J. Mr.
Downloaded: 2019-05-21
Single user licence only, copying and networking prohibited

EN 60529:1991[1)], *Degrees of protection provided by enclosures (IP Code) (IEC 60529:1989)*

EN 61000-4-2, *Electromagnetic compatibility (EMC) — Part 4-2: Testing and measurement techniques — Electrostatic discharge immunity test (IEC 61000-4-2)*

EN ISO 10666, *Drilling screws with tapping screw thread — Mechanical and functional properties (ISO 10666)*

EN ISO 15480, *Hexagon washer head drilling screws with tapping screw thread (ISO 15480)*

EN ISO 15481, *Cross recessed pan head drilling screws with tapping screw thread (ISO 15481)*

EN ISO 15482, *Cross recessed countersunk head drilling screws with tapping screw thread (ISO 15482)*

EN ISO 15483, *Cross recessed raised countersunk head drilling screws with tapping screw thread (ISO 15483)*

ISO/IEC 18033-3:2010, *Information technology - Security techniques- Encryption algorithms - Part 3: Block ciphers*

3 Terms and definitions

For the purposes of this document, the following terms and definitions apply.

ISO and IEC maintain terminological databases for use in standardization at the following addresses:

- IEC Electropedia: available at http://www.electropedia.org/
- ISO Online browsing platform: available at https://www.iso.org/obp

3.1
access card
card or tag, read only or read write, without integrated circuit, does not provide encryption

Note 1 to entry: It can be used with contact or contactless.

EXAMPLES Magnetic stripe, Wigand, barcode.

3.2
audit trail capability
degree of functionality intended to provide a record of mechatronic cylinder and/or its electronic key events that will identify the individual credential used to operate the mechatronic cylinder

3.3
attack
unauthorized attempt to open a mechatronic cylinder by various techniques (destructive and or non-destructive techniques)

3.4
cam
component of the cylinder to provide the movement necessary to effect locking

1) This document is impacted by the amendments EN 60529:1991/A1:2000 and EN 60529:1991/A2:2013.

Licensed to: Koole, A.J. Mr.
Downloaded: 2019-05-21
Single user licence only, copying and networking prohibited

3.5
credential
identification means containing information necessary to authorize operation of the MC

3.6
cylinder
device, usually distinct from its associated lock or latch, operated by a key

3.7
direct coding
marking on in the key where the mechanical and/or electronic coding can be determined without reference to another data source

3.8
effective differ
difference between cylinders of similar design, achieved only by the movable detainer, which enables each cylinder to be operated only by its own key

Note 1 to entry: The number of effective differs is equal to the number of theoretical differs after deduction of the differs excluded by the manufacturer due to technical constraints and those differs excluded in accordance with the restraints of 4.8.4.

3.9
electronic dummy key
electronic key which cannot electronically operate the mechatronic cylinder

Note 1 to entry: If applicable the electronic dummy key has the right mechanical code.

3.10
electronic key
device containing credential(s) necessary to authorize operation of the (mechatronic) cylinder

3.11
False Acceptance Rate
FAR
probability that the system incorrectly authorizes a non-authorized person, due to incorrectly matching the biometric input with a template

Note 1 to entry: The FAR is normally expressed as a percentage, following the FAR definition this is the percentage of invalid inputs which are incorrectly accepted.

3.12
FAR-1
FAR-1 (1/FAR) is the inverse of FAR

3.13
ICC = Integrated Circuit Card
card, tag or device with an integrated circuit which can be used with contact or contactless (RFID), active or passive

EXAMPLES RFID, Smartcard.

3.14
key
separate device corresponding to the cylinder, which can mechanically operate the cylinder

Licensed to: Koole, A.J. Mr.
Downloaded: 2019-05-21
Single user licence only, copying and networking prohibited

3.15
key way
aperture extending along the whole or part of the length of the plug into which the key is inserted

3.16
knob
element of the cylinder for mechanical hand operation of the cylinder

3.17
mechatronic cylinder
MC
device with an integrated or a remote electronic system, which is to be used with a lock for the purpose of operating the lock and/or detaining elements after verifying the authorization of an electronic key, and which can be replaced by a mechanical cylinder conforming to EN 1303 without replacing any door furniture

3.18
moveable detainer
part of the mechanism of a cylinder, which should first be moved by the key into a pre-determined position before the key and/or plug can move

3.19
plug
part of a cylinder that can be moved when the proper key is used

3.20
steps
cuts in the surface of a bit or blade which operates movable detainers

3.21
thumb turn
element of the cylinder for mechanical finger operation of the cylinder

3.22
time zone
degree of functionality intended to provide security by limiting the time that a valid credential will operate the MC

3.23
manufacturer
entity or organization that is legally responsible for putting the product on the market

4 Requirements

4.1 General

The structure of the following requirements and test procedures reflects the classification in accordance with Clause 6.

Licensed to: Koole, A.J. Mr.
Downloaded: 2019-05-21
Single user licence only, copying and networking prohibited

4.2 Category of use

4.2.1 Key strength

When tested in accordance with 5.4.1, the electronic key shall not break under the applied maximum torque of 2.5 Nm.

After the test, the electronic key shall be capable of being removed from the MC and re-used to operate the same MC with a torque not exceeding 1.5 Nm.

Compliance is checked by the test method given in 5.4.1.

4.2.2 Stability of electronic key

The electronic key shall be able to withstand a freefall from 1.5 m height, without loss of function and without the need to reassemble it.

Compliance is checked by the test method given in 5.4.2.

4.2.3 Wrong electronic code

When using an electronic dummy key with the right mechanical code the MC shall be capable of resisting a torque on the key of 3.5 Nm (or the maximum torque that can be transmitted with the normal manufacturers key if less than 3.5 Nm) without loss of function.

Compliance is checked by the test method given in 5.10.5.3, however with a torque of 3.5 Nm.

If a MC is equipped with a knob or thumb turn on the outside (replacing the key function) and this MC is not protected by a clutch to prevent damage in case of excessive torque being applied to the knob or thumb turn, the MC shall be capable of resisting a torque of 5 Nm +0.25 Nm -0 Nm, without loss of function.

4.2.4 Bump requirements

The MC and its electronic keys shall be able to withstand bumps.

The MC shall conform to the requirements given in Table 1.

The MC and the electronic key may have temporary degradation or loss of function and/or data, but the MC shall remain in secured position. The loss of function and/or data shall be self-recoverable within 5 s.

Compliance is checked by the test methods given in 5.4.3.

4.2.5 Vibration requirements

The MC and its electronic keys shall be able to withstand vibrations.

The MC shall conform to the requirements given in Table 1.

The MC and the electronic keys may have temporary degradation or loss of function and/or data, but the MC shall remain in secured position. The loss of function and/or data shall be self-recoverable within 5 s. The loss of function and/or data shall be self-recoverable within 5 s after the vibration test.

Compliance is checked by the test methods given in 5.4.4.

Licensed to: Koole, A.J. Mr.
Downloaded: 2019-05-21
Single user licence only, copying and networking prohibited

Table 1 — Bump and Vibration requirements

Test method	Grade 1
1. Bump test EN 60068-2-27	40 g (100 bumps / 3 directions) duration per bump 6 ms
3.a Vibrations EN 60068-2-6:2008	- Frequency range: 10 Hz to 150 Hz - Displacement amplitude: 0,35 mm - Acceleration amplitude: 5 g - Duration of endurance in sweep cycles for each axis: 5 - Cross-over frequency : 58 Hz to 62 Hz - Sweep rate: 1 octave per minute

4.2.6 Electrostatic discharge requirement

The MC and its electronic keys shall be able to withstand high voltage and static electricity. It shall conform to the requirements given in EN 61000-4-2 and conform to the specification in Table 7, grade 0.

The MC and the electronic keys may have temporary degradation or loss of function and/or data, but the electric blocking of the MC shall remain in secured position. The loss of function and/or data shall be self-recoverable within 5 s.

Compliance is checked by the test method given in 5.10.9.

4.2.7 Minimum knob transmission

If a MC is equipped with a blocked knob on the outside and this MC is protected by a clutch to prevent damage in case of excessive torque being applied to the knob, the clutch shall be able to transmit a minimum torque of 1,5 Nm having been released 100 times within 20 min.

Compliance is checked by the test method given in 5.10.11.

4.3 Durability requirements

When tested in accordance with 5.5, it shall be possible to operate the MC with a new original authorized electronic key with a torque not exceeding 1.5 Nm after the number of completed test cycles specified in 6.3.

Compliance is checked by the test method given in 5.2.

4.4 Fire/smoke resistance

The MC shall conform to the requirements of Annex A.

4.5 Environmental resistance

4.5.1 Corrosion resistance requirements

After the corrosion test of 5.7.1, The MC shall operate with authorization not exceeding a torque of 1.5 Nm.

Compliance is checked by the test method in 5.2.

Corrosion resistance is applicable for environmental resistance, grades 2, 3 and 4 (see Table 2). This corrosion test shall apply to functionality only.

Licensed to: Koole, A.J. Mr.
Downloaded: 2019-05-21
Single user licence only, copying and networking prohibited

No distinction is made between the inside and the outside of cylinder and/or door.

4.5.2 Resistance of MC against water

The MCs shall have protection, against water.

After been tested as in 5.7.2 for grades 2, 3 and 4 in Table 2 the MC shall operate with its authorized electronic key.

4.5.3 Dry Heat

The MC and its electronic key shall be able to function correctly at different temperatures. It shall also be able to function correctly after being exposed to thermal shocks. See Tables 2 and 3 for environmental resistance MC and electronic keys.

Compliance is checked by the test methods of 5.7.3.

4.5.4 Cold

The MC and its electronic key shall be able to function correctly at different low temperatures. It shall also be able to function correctly after being exposed to thermal shocks. See Tables 2 and 3 for environmental resistance MC and electronic keys.

Compliance is checked by the test methods of 5.7.4.

4.5.5 Damp heat cyclic

The MC and its electronic keys shall be able to function correctly in an environment of high relative humidity. See Tables 2 and 3 for environmental resistance MC and electronic keys.

Compliance is checked by the test method of 5.7.5.

4.5.6 Resistance of electronic key against water

The electronic keys shall be able to operate its MC after they have been exposed to water in accordance with the test described in 5.7.6.

Table 2 — Environmental resistance MC

Requirement	Test clause	Grade				
		0	1	2	3	4
4.5.1 Corrosion resistance	5.7.1	-	-	Yes	Yes	Yes
4.5.2 Protection of MC against water	5.7.2	-	-	Yes	Yes	Yes
4.5.3 Dry heat	5.7.3	-	+55° C, 16 h	+55° C, 16 h	+55° C, 16 h	+65° C, 16 h
4.5.4 Cold	5.7.4	-	+5° C, 16h	+5° C, 16 h	-10° C, 16 h	-25° C, 16 h
4.5.5 Damp Heat (cyclic)	5.7.5	-	-	-	-	+55° C, 6 cycles

Licensed to: Koole, A.J. Mr.
Downloaded: 2019-05-21
Single user licence only, copying and networking prohibited

Table 3 — Environmental resistance MC Key

Requirement	Test clause	Grade				
		0	1	2	3	4
4.5.6 Resistance of electronic key against water	5.7.6	-	-	Yes	Yes	Yes
4.5.3 Dry heat	5.7.3	-	+55° C, 16 h	+55° C, 16 h	+55° C, 16 h	+65° C, 16 h
4.5.4 Cold	5.7.4	-	+5° C, 16 h	+5° C, 16 h	-10° C, 16 h	-25° C, 16 h
4.5.5 Damp Heat (cyclic)	5.7.5	-	-	-	-	+55° C, 6 cycles

4.6 Key related security

4.6.1 General

For classification of mechanical code variation (5th character), the following requirements shall be fulfilled:

— 4.6.2;

— 4.6.3;

— 4.6.4;

— 4.6.5;

— 4.6.6.

For classification of electronic code variation (6th character), the following requirements shall be fulfilled:

— 4.6.5;

— 4.6.6;

— 4.6.7.

In case of a double cylinder, it is assumed that the grades for both categories apply to the attack side/outside of the cylinder. This side shall have a proper indication/marking, either on the product or on the documents with the product.

4.6.2 Minimum number of effective mechanical code variations

The minimum number of effective mechanical code variations of the MC shall be as specified in Table 4.

Compliance is checked by the test method of 5.8.2.

NOTE Grade 0 includes MCs without mechanical code variations.

Licensed to: Koole, A.J. Mr.
Downloaded: 2019-05-21
Single user licence only, copying and networking prohibited

4.6.3 Minimum numbers of movable detainers

The minimum number of movable detainers shall be as specified in Table 4.

4.6.4 Maximum number of identical steps

The choice of key steps for movable detainer operation, which have the same operating level, shall be as specified in Table 4.

NOTE The requirements as specified in Table 4 relate to one row only of movable detainers.

4.6.5 Direct coding on key

Direct key coding shall not be used on electronic keys for key related security grades 3 to 6.

4.6.6 Torque resistance of plug/cylinder relevant to key related security

Torque resistance of plug/cylinder shall be classified in relation to mechanical code variations. When tested as in 5.8.3 the MC shall resist the torque in Table 4 without operating the cylinder. If the torque cannot be applied, the cylinder shall be deemed to have passed the test.

This requirement is not applicable if the requirement of 4.8.6 is applied.

4.6.7 Operation of security mechanism (inter-passing)

For the key related security grades 1, 2 and 3, it shall not be possible before the durability test to operate the cylinder with the next closest key to its own key using a torque of 1,5 Nm $^{+0,2}_{-0}$.

For the key related security grades 4, 5 and 6, it shall not be possible before and after the durability test to operate the cylinders with the next closest key to its own key using a torque of 1,5 Nm $^{+0,2}_{-0}$.

Tested in accordance with 5.8.7.

Licensed to: Koole, A.J. Mr.
Downloaded: 2019-05-21
Single user licence only, copying and networking prohibited

Table 4 — Mechanical codes

Clause	Requirement	Test clause	Grades							Unit
			0	1	2	3	4	5	6	
4.6.2	Minimum number of effective mechanical code variations [a]	5.8.2	-	100	300	15’000	30’000	30’000	100’000	No
4.6.3	Minimum number of movable detainers	5.8.3	-	2	3	5	5	6	6	No
4.6.4	Maximum number of identical steps [b]	5.8.4	-	100	70	60	60	60	50	%
	Maximum number of identical adjacent steps [b]		-	2	2	2	2	2	2	No
4.6.5	Direct coding on key	5.8.5	-	-	-	No	No	No	No	-
4.6.6	Torque resistance of plug/cylinder	5.8.6	-	2.5	5	15	15	15	15	Nm
4.6.7	Operation of security mechanism (interpassing)	5.8.7	-	1.5 [c]	1.5 [c]	1.5 [c]	1.5 [d]	1.5 [d]	1.5 [d]	Nm

[a] The minimum number of effective differs in Grade 0 includes MCs without mechanical code variations.

[b] The maximum number of identical steps relates to one row only. Rounded to the lower integer.

[c] Tested before the durability test.

[d] Tested before and after the durability test.

4.6.8 Credential related security

4.6.8.1 General

The MC and its credentials for grade A to D shall have security against code manipulations, brute force attacks, credential copying, code spying and code guessing regardless of the technique used.

The requirements for the credential related security vary with the different credential techniques used for the MC. Table 5 shows the requirements for RFID (radio frequency identification, active or passive), PIN code, magnetic stripe and biometric techniques.

Licensed to: Koole, A.J. Mr.
Downloaded: 2019-05-21
Single user licence only, copying and networking prohibited

If the method of obtaining access to the MC does not fall into any of these categories, the credential related security grade shall be declared by analogy to the best comparable technique.

In the case where the MC may be authorized by two of the techniques the grade for credential related security depends on whether both techniques may be used alternatively to gain access or both techniques are always used together to gain access. In the first case, the grade is the lower one of the grades of the individual techniques, in the latter case the grade is one grade higher than the highest grade of the individual technique, but not higher than the highest possible grade D.

Verified according to subclause 6.7.

Table 5 — Credential related security

Technique	Requirements	0	A	B	C	D
ICC	code variations / max number of auth. codes	NPD	10.000	1.000.000	1.000.000	no requirement.
	encryption	NPD	no requirement	no requirement	yes	communication encrypted with AES or 3DES; session keys, unique key
	encryption key length	NPD	no requirement	no requirement	48 Bits	128 Bits
	copy protection	NPD	no requirement	no requirement	yes	yes
PIN code	code variations / max number of auth. codes	NPD	1.000	10.000	Not permitted	Not permitted
	additional security features	NPD	dead time after failed attempt	dead time after failed attempt and protected visibility	Not permitted	Not permitted
	T = the maximum number of codes of the unit divided by the read speed (the number of possible codes per hour), divided by the number of possible users and divided by 2.	NPD	T=6 h	T=24 h	Not permitted	Not permitted

Licensed to: Koole, A.J. Mr.
Downloaded: 2019-05-21
Single user licence only, copying and networking prohibited

Technique	Requirements	0	A	B	C	D
Access Card	code variations / max number of auth. codes	NPD	10.000	1.000.000	Not permitted	Not permitted
	copy protection	NPD	no requirement	no requirement	Not permitted	Not permitted
	T = the maximum number of codes of the unit divided by the read speed (the number of possible codes per hour), divided by the number of possible users and divided by 2.	NPD	T=6 h	T=24 h	Not permitted	Not permitted
Biometrics	FAR^{-1} / max. number of auth. templates	NPD	100	1.000	10.000	Not permitted
	additional security features	NPD	no requirement	alive detection	alive detection	Not permitted

NOTE Grade D is not achievable for pure biometric systems. Grade C and D are not achievable for pure PIN code or access card systems.

4.6.8.2 ICC

4.6.8.2.1 Effective code variations

The effective code variations are all code variations possible by design divided by the maximum possible number of authorized codes on one MC. It shall be at least the number according to Table 5.

Note: In the case where the unique ID of the RFID is used, this corresponds to the possible variations of the unique ID divided by the maximum possible number of authorized credentials. Note: Examples are given in Annex F.

4.6.8.2.2 Encryption

In grade C, the data on the RFID or the communication between RFID and MC shall be encrypted by any encryption algorithm. The length of the encryption key shall be at least 48 Bits long.

In grade D, the communication between the RFID and the MC shall be encrypted by the AES encryption method according to ISO/IEC 18033-3:2010, 5.2. The encryption key shall be at least 128 Bits long. For each communication attempt (session) a new session key shall be created and used for the communication. Session keys and encryption keys shall never be broadcasted (challenge response technique). The encryption key shall be unique for each system installation of MCs or, alternatively, shall be user configurable.

4.6.8.2.3 Copy protection

In grades C and D the credential shall be copy protected. It shall not be possible to copy an authorized credential using standard third party equipment.

Licensed to: Koole, A.J. Mr.
Downloaded: 2019-05-21
Single user licence only, copying and networking prohibited

4.6.8.3 PIN Code

4.6.8.3.1 Effective code variations

The effective code variations are the possible code variations divided by the maximum number of possible authorized codes on one MC. It shall be at least the number according to Table 5.

Note: In the case of a 4 digit PIN code and a maximum number of 10 users, the effective code variations are 1000.

4.6.8.3.2 Dead time failed attempts

The MC shall have the security feature that makes it impossible to try out all or a large portion of all possible codes within a reasonable time.

4.6.8.3.3 Protected visibility

For MCs grade B the included angle over which code information may optically be observed shall be not more than 30° about the centre-line.

4.6.8.3.4 Mean time to gain access by trying

The mean time to gain access by trying T shall be greater than the time stated in Table 5. T is calculated by the maximum number of codes of the unit divided by the read speed (the number of possible codes per hour), divided by the number of possible users, divided by 2.

4.6.8.4 Access Card

4.6.8.4.1 Effective code variations

The effective code variations are all code variations possible by design divided by the maximum possible number of authorized codes on one MC. It shall be at least the number according to Table 5.

4.6.8.4.2 Mean time to gain access by trying

The mean time to gain access by trying T shall be greater than the time stated in Table 5. T is calculated by the maximum number of codes of the unit divided by the read speed (the number of possible codes per hour), divided by the number of possible users, divided by 2.

4.6.8.5 Biometrics

4.6.8.5.1 FAR^{-1} divided by maximum number of authorized templates

The analogy of effective code variations in biometric systems is the inverse of the false acceptance rate (FAR-1) divided by the maximum possible number of authorized templates on one MC. It shall be at least the number according to Table 5.

4.6.8.5.2 Alive detection

In grades B and C the MC shall be able to detect whether the presented credential (fingerprint, hand vein image, iris image) comes from an alive human to prevent that artificially produced images may be successfully presented to the MC.

Compliance is checked by the test method of 5.8.4.

4.7 System management

The audit trail record shall be stored in a form of non-volatile memory or data shall otherwise be preserved during removal of power supply. The MC shall have time zoning capability as specified in Table 6.

Licensed to: Koole, A.J. Mr.
Downloaded: 2019-05-21
Single user licence only, copying and networking prohibited

Table 6 — Audit trail and time zone

Grade 0	No requirement
Grade 1	Time zone without audit trail
Grade 2	Audit trail capability without time zone
Grade 3	Audit trail capability and time zone

Time zone and audit trail capability shall be protected against manipulation.

Compliance is checked by the test method of 5.9.

4.8 Attack resistance requirements

4.8.1 General

The MC shall conform to the requirements based on:

— Mechanical part without electronic lock (only MC);

— Electronic part with an electronic dummy key with right mechanical code;

— Both parts.

In case a MC is equipped with a knob or thumb turn on the attack side the MC should conform to the same performance (test requirements) in accordance with 5.10.4, using an appropriate tool for pulling a knob or thumb turn. When the knob or thumb turn can be removed with common tools and/or hitting in accordance with the chisel test given in 5.10.2, the test shall be performed without the knob or thumb turn.

The requirements for each grade are described in Table 7.

4.8.2 Resistance to drilling

After testing in accordance with 5.10.1, the lock driving element of the cylinders shall not rotate without the correct key, using a maximum torque of 5 Nm. It is not necessary for the correct key to operate the cylinder after testing.

4.8.3 Resistance to attack by chisel

After testing in accordance with 5.10.2, the lock driving element of the cylinders shall not rotate without the correct key, using a maximum torque of 5 Nm. It is not necessary for the correct key to operate the cylinder after testing.

4.8.4 Resistance to attack by twisting

After testing in accordance with 5.10.3, the lock driving element of the cylinders shall not rotate without the correct key, using a maximum torque of 5 Nm. It is not necessary for the correct key to operate the cylinder after testing.

4.8.5 Resistance to attack by plug/cylinder extraction

After testing in accordance with 5.10.4, the cam of the cylinders shall not rotate manually with 5 Nm through 360°, or in the case of cylinders with restricted plug movement, to the maximum permitted by the design.

It is not necessary for the correct key to operate the cylinder after testing.

Licensed to: Koole, A.J. Mr.
Downloaded: 2019-05-21
Single user licence only, copying and networking prohibited

4.8.6 Torque resistance of plug/cylinder relevant to attack resistance

After testing in accordance with 5.10.5, the plug and/or cylinder in attack resistance grades A to D shall not rotate using the applied torque specified in Table 7.

It is not necessary for the correct key to operate the cylinder after testing.

4.8.7 Attack by hits

When tested in accordance with 5.10.6 the MC and its electronic keys shall be able to withstand opening by hits within the time specified in Table 7.

4.8.8 Attack by vibrations

When tested in accordance with 5.10.7 the MC and its electronic keys shall be able to withstand opening by vibrations within the time specified in Table 7.

4.8.9 Increased voltage attack

The MC and its electronic keys shall be able to withstand electrical attacks by using higher voltage than the normal supply voltage DC specified by the manufacturer. The MC or electronic key may have degradation or loss of function which is not recoverable, due to damage of equipment or software, or loss of data. The electric blocking of the MC shall remain in a locked position.

Compliance is checked by the test method given in 5.10.8.

4.8.10 Electrostatic discharge attack

The MC and its electronic keys should be able to withstand electrical attacks and manipulation using high voltage and static electricity specified in Table 7.

For grades 0, A to D the MC or electronic key may have degradation or loss of function which is not recoverable, due to damage of equipment or software, or loss of data. The electric blocking of MC shall remain in locked position.

Compliance is checked by the test method given in 5.10.9.

4.8.11 Magnetic field attack

The MC and its electronic keys, shall in grade A, B, C or D be able to withstand attacks and manipulation using a magnetic field. It shall not be possible to move the electronic blocking element from a closed to an open position by a magnet from any direction of the MC available after installation.

The MC shall withstand 2 min of attack by a maximum 0,6 T magnet.

The MC or electronic key may have degradation or loss of function which is not recoverable, due to damage of equipment or software, or loss of data. The electric blocking of the MC shall remain in locked position.

Compliance is checked by the test method given in 5.10.10.

Licensed to: Koole, A.J. Mr.
Downloaded: 2019-05-21
Single user licence only, copying and networking prohibited

Table 7 — Attack resistance

Sub clause number	Requirement	Test clause		Grade 0	Grade A	Grade B	Grade C	Grade D
4.8.2	Resistance to drilling	5.10.1	Effective time	No requirements	3 min	5 min	3 min	5 min
			Total time		5 min	10 min	5 min	10 min
4.8.3	Resistance to attack by chisel	5.10.2	Number of blows	No requirements	30 blows	40 blows	30 blows	40 blows
4.8.4	Resistance to attack by twisting	5.10.3	Number of twists	No requirements	20 twists	30 twists	20 twists	30 twists
4.8.5	Resistance to attack by plug/cylinder extraction	5.10.4	Time	No requirements	No requirements	No requirements	5 min	5 min
			Force				10 kN	15 kN
4.8.6	Torque resistance of plug/cylinder	5.10.5	Test 5.10.5.2	No requirements	20 Nm	30 Nm	20 Nm	30 Nm
			Test 5.10.5.3		key break or minimum 5 Nm	key break or minimum 7 Nm	key break or minimum 5 Nm	key break or minimum 7 Nm
4.8.7	Attack by hits	5.10.6	Effective time	No requirements	3 min	5 min	3 min	5 min
4.8.8	Attack by vibrations	5.10.7	Effective time	No requirements	3 min	5 min	3 min	5 min
4.8.9	Increased voltage attack test	5.10.8	Voltage	No requirements	Normal supply voltage + 6 V by a max. of 600 mA	Normal supply voltage + 48 V by a max. of 600 mA	Normal supply voltage + 6 V by a max. of 600 mA	Normal supply voltage + 48 V by a max. of 600 mA
4.8.10	Electrostatic discharge attack test	5.10.9	Contact	8 kV	8 kV	8 kV	8 kV	8 kV
			Air	15 kV	21 kV	21 kV	21 kV	21 kV
4.8.11	Magnetic field attack test	5.10.10	Time	No requirements	2 min	2 min	2 min	2 min

NOTE Grade 0 represents the requirements of 4.2 Category of use.

Licensed to: Koole, A.J. Mr.
Downloaded: 2019-05-21
Single user licence only, copying and networking prohibited

4.9 Requirements for product information

A MC and its electronic keys manufactured to this European Standard shall have clear and detailed instructions in its product documentation and/or product information for its installation operation and maintenance.

These instructions shall at least include the following:

a) The limitations on its intended use, such as the limitation of the rated voltage, temperature range, environment and allowed back set, etc.

b) The following warning in a prominent position: "The product should not be modified in any way except in accordance with those modifications described in the instructions."'

c) Installation and fixing instructions to ensure that the MC can achieve the performance requirements in this document, including any restriction in use, for example conditions under which the MC and its electronic key could be rendered inoperable.

NOTE 1 Example for installation considerations is given in Annex D (informative).

d) Maintenance and operation instructions to ensure that the MC and its electronic key continues to achieve the performance declared by the manufacturer for a reasonably economic working life.

e) A list of all elements that are tested and approved for use with this MC and which may be packaged separately, e.g. cylinder accessories, etc.

f) Information about the following product features:

— time zone possibilities (like number of time profiles, special time functions);

— the quality of time zones (for example recurring (daily, weekly) or calendar);

— authorization process for an access modification (code, master card...);

— audit trails: quantity, with or without time-stamp, authorized access, denied access also, access programming;

— what happens with the access during and after the removal of main power;

— battery change: how long the data are been protected;

— battery low or main power failure, deeper than the minimum of working voltage;

— how long the audit trails will be stored.

g) When a cylinder needs additional protection, e.g. security furniture in order to conform to a grade claimed by the manufacturer, then this shall be stated on the fixing instructions or other information which shall be provided with the product.

NOTE 2 There are different ways of supporting/distributing this information.

Licensed to: Koole, A.J. Mr.
Downloaded: 2019-05-21
Single user licence only, copying and networking prohibited

5 Testing, assessment and sampling methods

5.1 General

In the event of a failure, the MC or key is considered to have failed the test. If not stated in the test procedure a new MC or key should then be submitted, and should then pass the failed test and the following tests in the sequence of this MC.

In the case of double sided MCs, where one side is of a different security grade than the other, both sides shall be subjected to the appropriate test schedule, and the higher security side shall be marked accordingly.

The test sequence is shown in Annex C, Table C.1 and Table C.2.

The test methods are described in this paragraph. MCs intended for use with a specific lock shall be tested together with the lock.

Unless stated otherwise, all values are ± 2%.

Fit the MC to the test rig in accordance with the manufacturer's instructions. The ambient temperature of the test environment shall be controlled throughout the tests to between +15°C and +30°C. The environment shall be free from draughts.

Instruments with an accuracy of 1.5 % of measured values, or better, shall be used for measurements in accordance with these test methods.

All cycle testing equipment shall include means of recording the number of cycles attained.

The test rigs described in this document are principal examples. The test apparatus shall be rigid enough to avoid influencing test measurements.

The test method presumes that an electronic key can be put into the MC. If this is not necessary, the described test shall be made in a similar manner.

If a product is designed so that a torque cannot be applied to it (e.g. it is free spinning) it is deemed to pass the test.

During the tests parts of the MC shall not be repaired or replaced except for the battery.

5.2 Operational test

5.2.1 MC's operated by key

Fit the MC to a test rig simulating the installation in a door.

This test shall be conducted in the following sequence:

1) insert a electronic dummy key into the MC;
2) turn the electronic dummy key with a maximum torque of 2,5 Nm, or 3,5 Nm for 5.4.3, 5.4.4, 5.10.8, 5.10.9 and 5.10.10 in both directions consecutively, and maintain the torque for 5 s in each direction, verifying that the applied torque is not transferred to the cam;
3) remove the electronic dummy key from the MC;
4) insert a authorized electronic key into the MC;
5) turn the electronic key with a maximum torque of 1,5 Nm;
6) verify that the MC can be operated;
7) remove the electronic key from the MC.

Licensed to: Koole, A.J. Mr.
Downloaded: 2019-05-21
Single user licence only, copying and networking prohibited

Repeat the test sequence five times.

5.2.2 MC's operated by knob or thumb turn

Fit the MC to a test rig simulating the installation in a door.

This test shall be conducted in the following sequence:

1) try to operate the MC with an electronic dummy key;
2) apply a maximum torque of 5 Nm in both directions consecutively, and maintain the torque for 5 seconds in each direction, verifying that the applied torque is not transferred to the cam;
3) operate the MC with the electronic key;
4) turn the knob or thumb turn with a maximum torque of 1,5 Nm;
5) verify that the MC can be turned in both open and closed directions.

Repeat the test sequence 5 times.

5.2.3 MC's with freely rotating means, operated by key

Fit the MC to a test rig simulating the installation in a door.

This test shall be conducted in the following sequence:

1) insert an electronic dummy key into the MC;
2) turn the electronic dummy key in both directions consecutively, verifying that no torque higher than 0.3 Nm applied to the freely rotating means can be transferred to the cam;
3) remove the electronic dummy key from the MC;
4) insert a authorized electronic key into the MC;
5) turn the electronic key with a maximum torque of 1,5 Nm;
6) verify that the freely rotating means make the MC operable;
7) remove the electronic key from the MC.

Repeat the test sequence five times.

5.2.4 MC's with freely rotating means, operated by knob or thumb turn

Fit the MC to a test rig simulating the installation in a door.

This test shall be conducted in the following sequence:

1) try to operate the MC with a electronic dummy key;
2) turn the knob or thumb turn in both directions consecutively, verifying that no torque higher than 0,3 Nm applied to the freely rotating means can be transferred to the cam;
3) operate the MC with the authorized electronic key;
4) turn the knob or thumb turn with a maximum torque of 1,5 Nm;
5) verify that the freely rotating means make the MC operable and can be turned in both open and closed directions.

Repeat the test sequence five times.

Licensed to: Koole, A.J. Mr.
Downloaded: 2019-05-21
Single user licence only, copying and networking prohibited

If a system needs a different way of operating the MC the test should be in accordance with the product specification.

5.3 Performance tests

Testing of the MC should be carried out with the number of samples shown in Table C.1, testing should follow the sequence shown in Table C.1 in Annex C.

Except for test 5.4.2, 5.10.6, 5.10.7 and 5.10.10 the sequence shall be done on one sample.

— Re-testing:

If the test fails, re-testing on two new samples shall be done. If none of the new object fails the test has been passed.

Otherwise the test fails and a documented change shall be shown for new complete sequence on the modified object. Repetition of already conducted successful tests is only necessary if the documented modifications affect these previous test results.

Each test of 5.10.6, 5.10.7 and 5.10.10, use two samples and each sample shall be tested by two tester, total four tests.

The result is accepted if non or one test fails of four in each of 5.10.6, 5.10.7 and 5.10.10.

— Re-testing of 5.10.6, 5.10.7 and 5.10.10:

If two or more tests fail, new attempts shall be repeated and the manufacturer shall have the opportunity to be present during the retest.

If none or one of the new attempts fails the test has been passed otherwise the test fails and a documented change must be shown for new complete sequence on the modified sample.

Repetition of already conducted successful tests is only necessary if the documented modifications affect these previous test results.

5.4 Category of use

5.4.1 Key strength

The MC shall be mounted; with the cam blocked against rotation, in the metal fixture illustrated in, Figures 4, 5 and 6. The authorized electronic key shall be fully inserted in the MC and a torque of 2,5 Nm +/- 0,1 Nm applied to the electronic key without shock for a period of 5 s (+ 1 / - 0 s).

The electronic key shall than be removed, reinserted and shall operate the MC with a torque not exceeding 1.5 Nm.

NOTE In case a key is not intended to operate a cylinder mechanically this test can be omitted.

5.4.2 Stability of electronic key

Place the electronic key on a horizontal flat surface randomly orientated at a height of 1,5 m, push the key slowly over the edge. The surface on which the key falls shall be of concrete. The key shall operate the MC.

Number of tested keys: 10.

Repeat the test three times.

After the test at least 9 out of 10 electronic keys shall operate the MC.

Licensed to: Koole, A.J. Mr.
Downloaded: 2019-05-21
Single user licence only, copying and networking prohibited

5.4.3 Bump test (cylinder)

The test consists of exposing the MC and its electronic key, not inserted, to bumps.

Place the MC and related electronic key on a bump apparatus.

Follow the test procedure from EN 60068-2-27 with the parameters specified in Table 1.

After the test, subject the MC and its electronic key to the operational test of 5.2.

5.4.4 Vibration test

The test consists of long time exposing the MC and electronic key, not inserted, to sinusoidal vibration.

Place the MC and its electronic key on a vibration apparatus.

Follow the procedure from EN 60068-2-6.

Before the test, subject the MC to the operational test of 5.2 with its electronic key.

After changing the vibration axis, subject the MC to the operational test of 5.2 with its electronic key.

After the test, subject the MC with its electronic key to the operational test of 5.2.

5.5 Durability tests

The MCs shall conform to the requirements of 4.3.

Test the endurance of the MC using test apparatus as Figure 1.

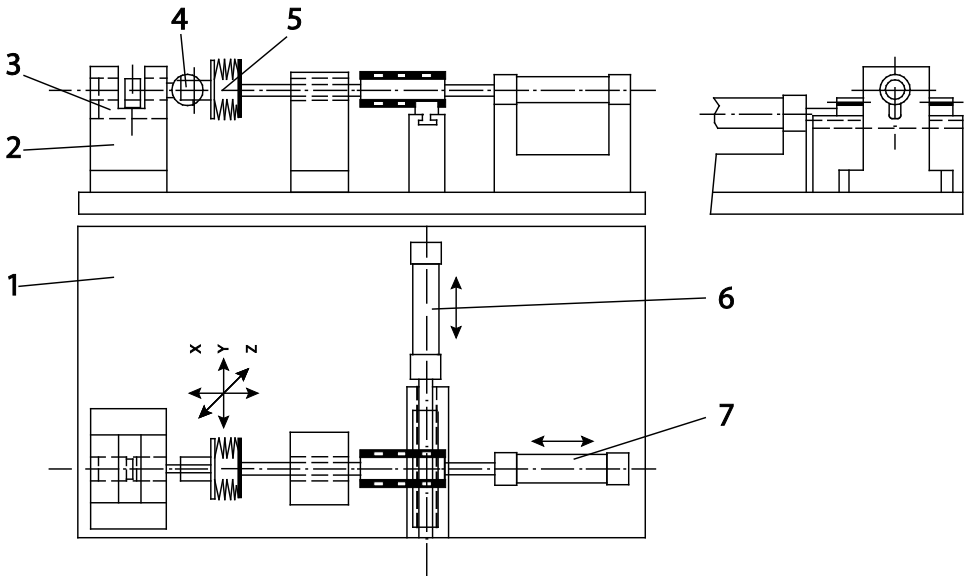

Key

1 fixture
2 cylinder fixture
3 cylinder
4 key
5 flexible key holder
6 motor for turning the key
7 motor for axial movement of key

Figure 1 — Durability test apparatus

Licensed to: Koole, A.J. Mr.
Downloaded: 2019-05-21
Single user licence only, copying and networking prohibited

Test the apparatus as follows:

— insert the electronic key and/or bring the cylinder in the state for operation;

— rotate it clockwise to 360° or to the maximum rotation limit of the design; during rotation the electronic key, knob or thumb turn has to overcome a torque applied to the plug of at least 0,15 Nm once to ensure that the cam will drive the deadbolt;

— withdraw the electronic key and/or bring the cylinder in the locked position;

— insert the electronic key and/or bring the cylinder in the state for operation;

— rotate it anticlockwise to 360° or to the maximum rotation limit of the design. During the rotation the electronic key, knob or thumb turn has to overcome a torque applied to the plug of at least 0,15 Nm once to ensure that the cam will drive the deadbolt;

— withdraw the electronic key and/or bring the cylinder in the locked position.

Count the number of successful test cycles.

The plug shall be free from torque during insertion and withdrawal of the electronic key. The resistive torque shall not be applied before an angle of 15° from the position of the electronic key extraction.

Repeat the sequence at a speed of three to twelve cycles per minute.

Between each step a) to f) and each cycle the rest time has to be specified by the manufacturer, if applicable.

During the cycle test, the electronic key may remain partly inserted in the cylinder but shall have cleared all movable detainers.

The electronic key used for the durability test can be cleaned and the MC shall be lubricated in accordance with the instructions of the manufacturer at the start of the test and after each 5 000 cycles using a lubricant recommended by the manufacturer.

After completion of the appropriate number of cycles the operation of the cylinders shall be tested using a new authorized electronic key. The rotation shall be obtained with a maximum torque of 1,5 Nm.

In cases where it is not possible to use the Standard cycle sequence, the manufacturer shall specify an alternative sequence that conforms as closely as possible to the Standard procedure. Subject to the approval of the testing authority the modified sequence shall then be used. The test report shall include a description of the special cycle used and the approval of the test authority.

If the cylinder should jam and cease to operate during the test, then providing the cylinder continues to operate in the proper manner when released, the test shall continue.

After each 10 000 cycles compliance is checked by the test method of 5.2 (only one sequence).

The durability test excludes the battery lifetime in cylinder, knob and/or key.

Final measurements: After the test, subject the MC to the operational test of 5.2.

If a cylinder is uniquely suitable for use with a particular lock unit, or where a cylinder is sold with and intended for use with a particular lock unit, then the cylinder shall be tested with the lock without applying the 0,15 Nm resistive torque in the test.

5.6 Fire/smoke resistance tests

Reference is made to Annex A.

Licensed to: Koole, A.J. Mr.
Downloaded: 2019-05-21
Single user licence only, copying and networking prohibited

5.7 Environmental resistance tests

5.7.1 Corrosion tests

The MC shall be tested with a neutral salt spray in accordance with 6.1 of EN 1670:2007, grade 3.

For this test the cylinders shall be mounted in a block in accordance with the manufacturer's instructions and stood in the cabinet, so that the cylinders are oriented in the manner that they would assume in use.

After the salt spray procedure, it shall be possible to operate a cylinder with the proper key using a maximum torque described in 4.5.1 within 5 min where the electronic key may be inserted several times and/or moved in a rotating way.

This test shall be started within one minute after completion of the salt spray test.

The MC may be lubricated before and/or during the operational test in accordance with the manufacturer’s instructions.

5.7.2 Resistance of MC against water

The MCs shall be mounted in a fixture with provision for the fitting of any necessary reinforcement or protection devices supplied with the cylinder. This test rig should conform to the installation of the MC in practice.

Except for the acceptance criteria, the MCs shall be tested with the IP X4 test methods as described in EN 60529:1991.

After the test, wait 10 min in ambient temperature before operate the MC with it’s authorized electronic key.

After a maximum of three attempts the electronic key shall operate the MC as in 5.2.

The key may be dried after each attempt

Unless otherwise specified, testing refers to the attack side of the MC.

5.7.3 Dry heat test (functional)

Expose the MC and its electronic keys to the temperature for sufficient time to allow temperature stability to be reached, and for functional tests to be conducted.

The MC shall be placed in a test chamber using the test rig in accordance with the manufacturer’s instructions. The keys shall be kept at room temperature.

The test apparatus and procedure shall be as described in EN 60068-2-2. The tests with gradual changes in temperature shall be used.

Before the test, subject the MC to the operational test of 5.2.

— Conditioning of MC:

  — Place MC into a test chamber;

  — Apply a conditioning temperature in accordance with the classification of Table 2;

  — Keep the keys at a room temperature (between 15° C and 30° C).

Licensed to: Koole, A.J. Mr.
Downloaded: 2019-05-21
Single user licence only, copying and networking prohibited

— Conditioning of electronic key:

  — Place the electronic key into a test chamber

  — Apply a conditioning temperature in accordance with the classification of Table 3;

  — Keep the MC at a room temperature (between 15° C and 30° C).

After the test period, remove the MC respectively the electronic key from the test chamber. Subject the MC and the electronic key to the operational test of 5.2 within 5 min.

Both tests may be combined.

5.7.4 Cold test

Expose the MC and its electronic keys to the temperature for sufficient time to allow temperature stability to be reached, and for functional tests to be conducted.

The MC shall be placed in a test chamber using the test rig in accordance with the manufacturer's instructions.

The keys shall be kept at room temperature.

The test apparatus and procedure shall be as described in EN 60068-2-1. The tests with gradual changes in temperature shall be used.

Before the test, subject the MC to the operational test of 5.2.

— Conditioning of MC:

Place MC into a test chamber;

Apply a conditioning temperature in accordance with the classification of Table 2;

Keep the keys at a room temperature (between 15° C and 30° C).

— Conditioning of key:

Place the key/electronic key into a test chamber;

Apply a conditioning temperature in accordance with the classification of Table 3;

Keep the MC at a room temperature (between 15° C and 30° C).

After the test period, remove the MC respectively the electronic key from the test chamber. Subject the MC and the electronic key to the operational test of 5.2 within 5 min.

5.7.5 Damp heat test (cyclic)

Expose the MC and its electronic keys to cyclic temperature and humidity variations as specified in EN 60068-2-30:2005, variant 1 (see Tables 2 and 3). The rates of increase of temperature are such that condensation should occur on the surface of the specimen.

The MC and its electronic keys shall be placed in the test chamber using the test rig in accordance with the manufacturer's instructions.

The test apparatus and procedure shall be as described in EN 60068-2-30. The Variant 1 test cycle and controlled recovery conditions shall be used.

Apply a conditioning upper temperature of 25° C and carry out 2 cycles.

After the test period, subject the MC to the operational test of 5.2.

Licensed to: Koole, A.J. Mr.
Downloaded: 2019-05-21
Single user licence only, copying and networking prohibited

5.7.6 Resistance of electronic key against water

The electronic key programmed and operating its MC shall be placed in water at ambient temperature and 10 cm deep for 10 s ± 1 s.

Wipe the key dry.

Insert/present the key in/to the MC within 2 min after starting the test.

After a maximum of three attempts the electronic key shall operate the MC and conform to 5.2.

5.8 Key related security

5.8.1 General

All information for mechanical and/or electronic code variations should be submitted in a form of a declaration by the manufacturer (see Annex E).

In case of a double cylinder, it is assumed that the grades for both categories apply to the attack side/outside of the cylinder. This side shall have a proper indication/marking, either on the product or on the documents with the product.

5.8.2 Minimum number of effective mechanical code variations

Check in accordance with 4.6.2 based on manufacturer's information.

5.8.3 Minimum number of movable detainers

Check in accordance with 4.6.3 based on manufacturer's information.

5.8.4 Maximum number of identical steps

Check in accordance with 4.6.4 based on manufacturer's information.

5.8.5 Direct coding on key

Check in accordance with 4.6.5 based on manufacturer's information.

5.8.6 Torque resistance of plug/cylinder relevant to key related security

Torque resistance of plug and/or cylinder shall be tested in accordance with 5.10.5.

5.8.7 Operation of the security mechanism

Check in accordance with 4.6.7, based on manufacturer's information.

The MC shall be fitted in a metal fixture as illustrated in Figure 7.

After verification of the function using the correct key, attempts shall be made to operate the MC in both directions by the next closest keys, according to the required security grade.

A torque of 1,5 Nm $^{+0,2}_{-0}$ shall be applied with a gentle increase of the torque and without shock to the bow of a fully and correctly inserted next closest key (one step up and one step down) taken from the manufacturer’s chart which shall differ from the correct key by one-step at one position only.

During the test, the fixing in the test apparatus shall keep the next closest key fully inserted and maintained in that position. Clearances and tolerances between the key and MC shall be used in attempt to operate the MC with the torque above.

For security grades 1, 2 and 3, the tests shall be performed on new MC.

For security grades 4, 5 and 6, the tests shall be performed on MC that have first been subjected to the appropriate cycles for durability specified in 4.3.

Licensed to: Koole, A.J. Mr.
Downloaded: 2019-05-21
Single user licence only, copying and networking prohibited

The next closest keys having the correct electronic authorization, but being different in one mechanical position only by one step, one step up and one step down defined by the manufacturer according to its key coding system as described for 4.8.7.

The choice of the code and the position shall be agreed between the lab and the manufacturer.

5.9 System Management

Check the information from the manufacturer's product documentation with the graded performance of the MC and/or the electronic keys and verify it conforms to 4.7.

5.10 Attack resistance tests

5.10.1 Resistance to drilling

The MC shall resist drilling in accordance with 4.8.2 and Table 7.

The cylinders shall be mounted in a fixture with provision for the fitting of any necessary reinforcements or protection devices supplied with the cylinder (example see Figure 2). A 700 W +/- 10 % (power consumption) hand drilling machine with a speed of 500 rpm to 800 rpm shall be mounted on a sliding block.

A force not exceeding 300 N ± 15 N shall be applied axially to the drill without shock.

High-speed steel drills (see bibliography) shall be used with a maximum diameter of 12 mm.

The test authority shall choose the actual diameter and the points of application to the face of the cylinder. A maximum of three drills per cylinder can be used.

Drilling shall continue for the appropriate maximum net drilling time within the total time allowed for each test, including time taken to attempt rotation of the cylinder, as follows: within the allowed total test time the lock driving element of the cylinder shall not rotate to the opening position when applying a maximum torque of 5 Nm by means of a suitable tool.

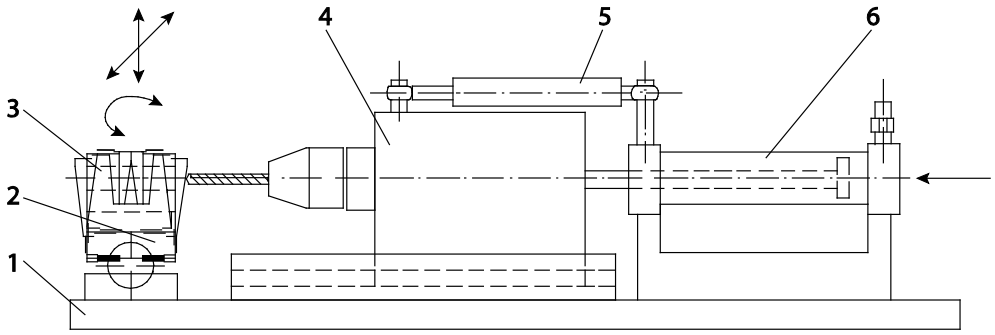

Key

1 fixture
2 cylinder fixture adjustable
3 cylinder
4 drill machine
5 chock absorber
6 motor for axial movement of drill

Figure 2 — Drilling fixture

Licensed to: Koole, A.J. Mr.
Downloaded: 2019-05-21
Single user licence only, copying and networking prohibited

5.10.2 Resistance to attack by chisel

The MC shall resist attack by chisel in accordance with 4.8.3 and Table 7.

The cylinders shall be tested in an apparatus as illustrated in Figure 3.

The test shall be carried out with a steel chisel (30 ± 1) mm wide, by (200 ± 20) mm long, with a bit angle of 60 °C -0 /+ 5 whose hardness is 52 Rockwell C to 58 Rockwell C.

The MC, including any reinforcement or protection device supplied with them, shall be mounted to the wooden block (using packers where appropriate) to give the maximum permissible projection, in accordance with the manufacturer's instructions, and the chisel applied to the protection or the cylinder at an angle not exceeding 10° from the plane of the surface of the test block. The wood test block shall be of laminated wood (EN 636:2003+A1:2015, class F 30/40, E 40/50 having between 18 and 22 laminates, or similar) with dimensions (100 +/- 5) mm x (300 +/- 5) mm x (40 + -0+2) mm.

The thickness of the wood test block to be defined in accordance with the manufacturers mounting instructions. A maximum of 30 blows in attack resistance grade 1 and 40 blows in attack resistance grade 2 shall be applied to the chisel by a drop hammer with a mass of 6 kg +/- 0.25 kg and falling from a height of 700 mm +/- 10 mm.

The test shall be discontinued if failure to conform to 4.8.3 becomes obvious during the test.

If the cylinder is fitted with furniture in accordance with EN 1906, then the security furniture shall conform to the appropriate clause. If the manufacturers' combination of escutcheon / security furniture prevents the chisel from being applied then it is deemed to have passed the test.

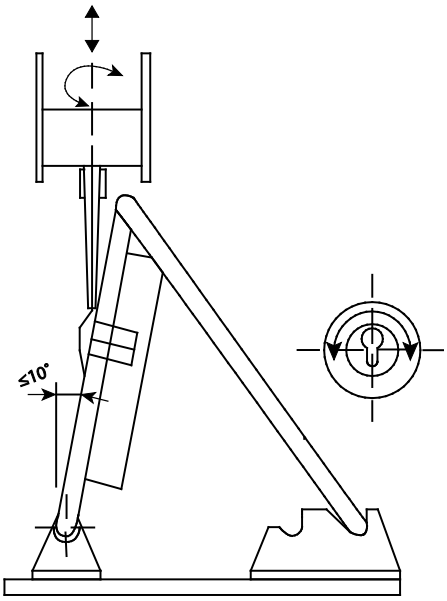

Figure 3 — Chisel attack fixture

5.10.3 Resistance to attack by twisting

The MC shall conform to the requirements of 4.8.4 and Table 7.

The cylinders shall be fitted to a test apparatus as described in 5.10.2 in accordance with the manufacturer's instructions. Any suitable tool can be used to grip the cylinders and/or the protection device and an attempt shall be made to break them by twisting using an applied maximum torque of 250 Nm.

Licensed to: Koole, A.J. Mr.
Downloaded: 2019-05-21
Single user licence only, copying and networking prohibited

The torque shall be applied progressively and without shock in 5 s and sustained for 4 s at each cylinder.

If the cylinder and/or its protecting device cannot be gripped and the cylinder does not project beyond the protecting device and/or face of the door more than 3 mm, then the test is passed.

A maximum number of twists according to Table 7 shall be performed with the twists alternating between clockwise and anticlockwise direction.

The test shall be discontinued if failure to conform to 4.8.4 becomes obvious during the test.

5.10.4 Resistance to attack by plug/cylinder extraction

The MC shall conform to the requirements of 4.8.5 and Table 7.

The cylinder, including any necessary reinforcement or protection devices recommended by the manufacturer or supplied with them, shall be mounted in the metal fixture as illustrated in Figures 4, 5 and 6 in accordance with the manufacturer's instructions.

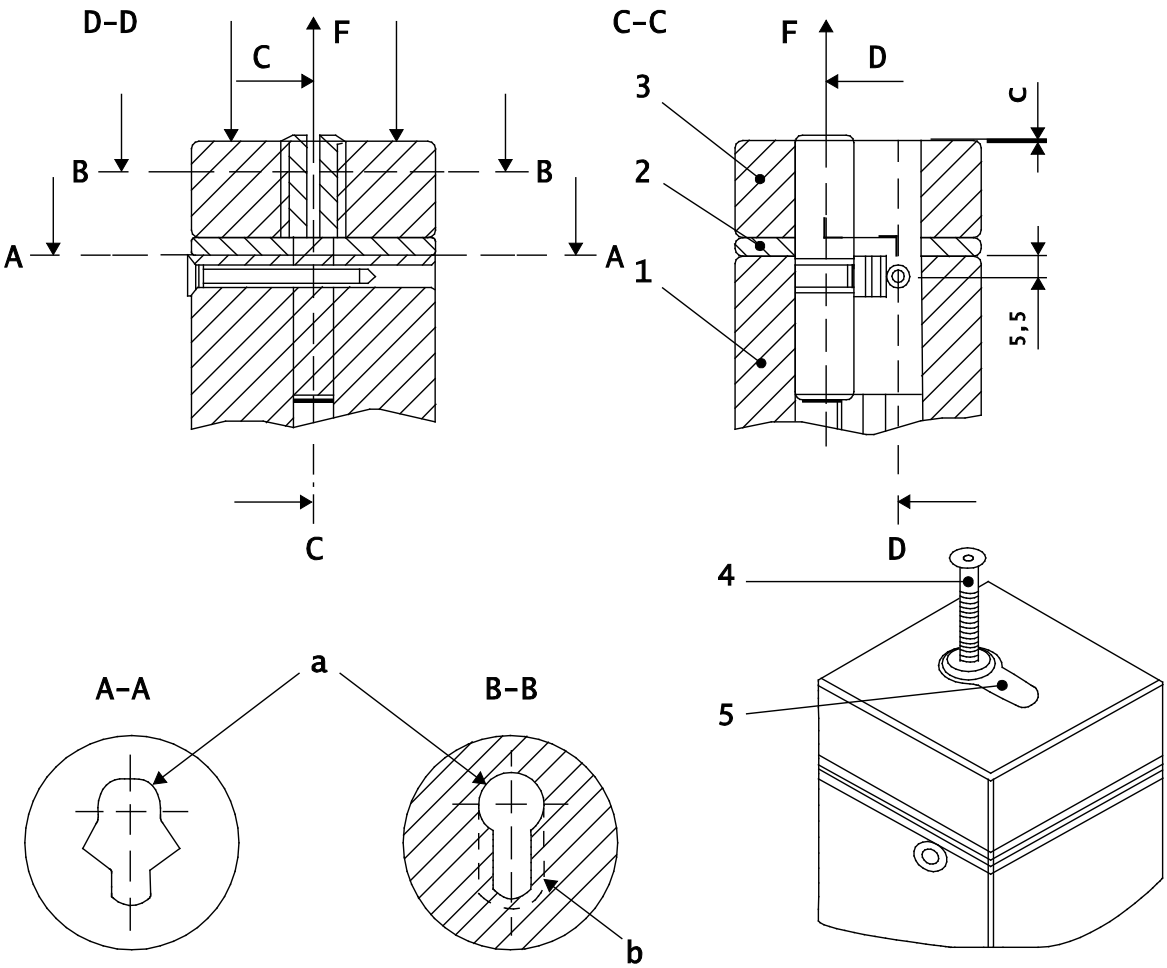

Key

a) gap 0,2 to max cylinder and cam dimension for all parts (pos 1, 2 and 3)

b) cut out for additional fixations according manufacturers specification

c) distance for different cylinder length

d) max 3 overlap

Figure 4 — Fixture for Resistance to attack by plug/cylinder extraction "Euro profile"

Licensed to: Koole, A.J. Mr.
Downloaded: 2019-05-21
Single user licence only, copying and networking prohibited

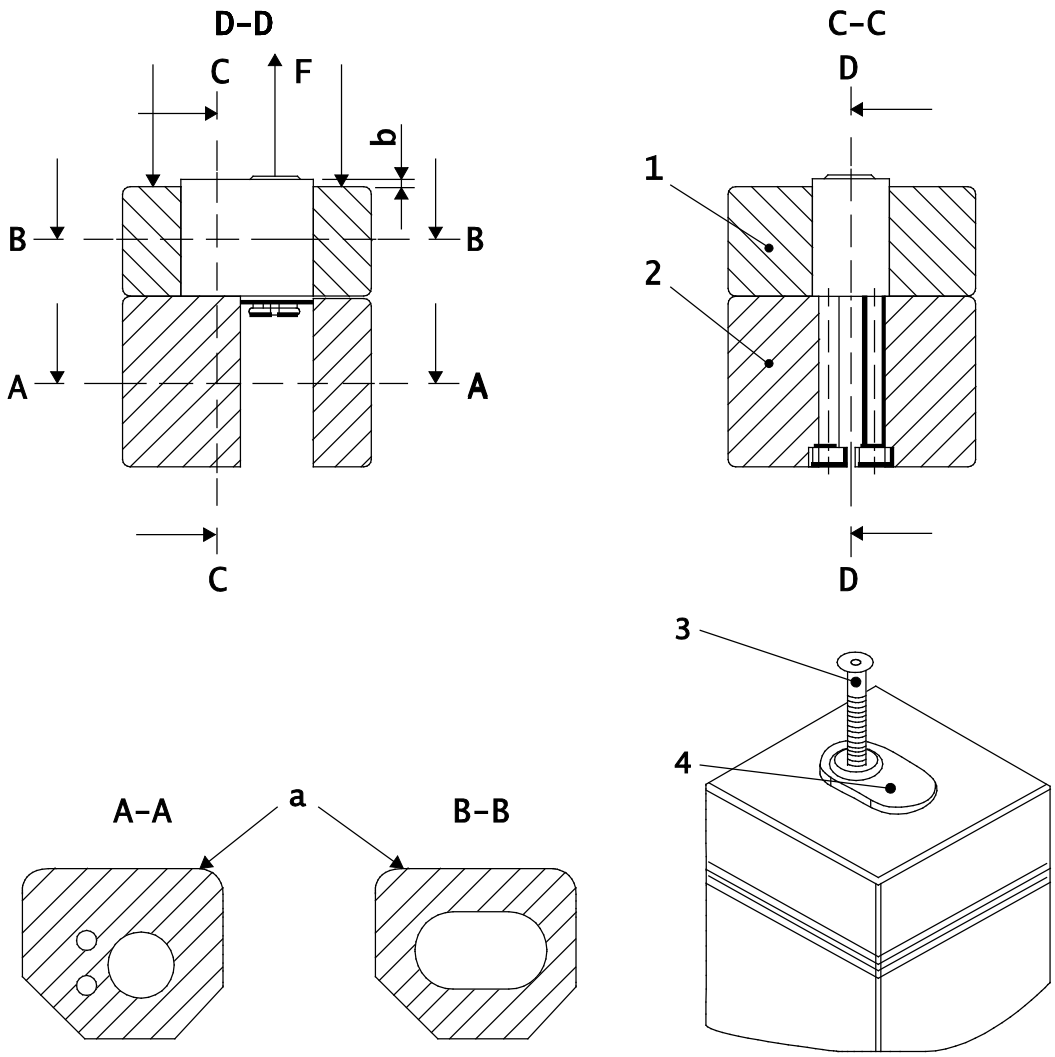

Key

a) gap 0.2 to max cylinder and cam dimension for all parts (pos. 1 and 2)

b) max. 3 overlap

Figure 5 — Fixture for Resistance to attack by plug/cylinder extraction "Scandinavian cylinder"

Licensed to: Koole, A.J. Mr.
Downloaded: 2019-05-21
Single user licence only, copying and networking prohibited

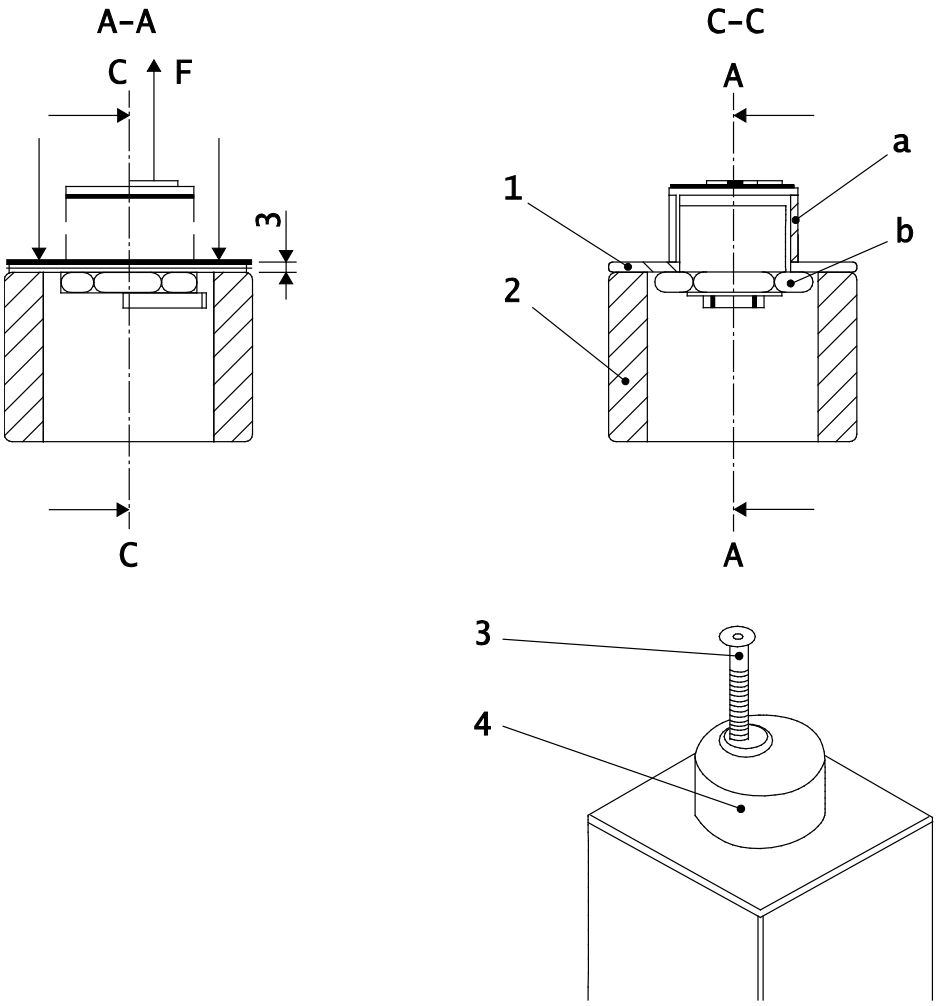

Key

a) sleeve according installation instruction

b) alternative fixation with nut

Figure 6 — Fixture for Resistance to attack by plug/cylinder extraction "Screw in or Cam cylinder"

A self-cutting traction screw according to EN ISO 10666, EN ISO 15480, EN ISO 15481, EN ISO 15482 or EN ISO 15483 of a maximum diameter of Ø5,5 mm shall be screwed into the plug/cylinder and an attempt made to withdraw the plug/cylinder by means of the appropriate maximum force specified in Table 6 applied progressively without shock within the time allowed. The time allowance begins from commencing to insert the traction screw.

If the design of the security furniture used to protect the cylinder does not enable the force to be applied then it is deemed to have passed the test.

The washer or fixing tool has to be designed in such a way that it can be used without unscrewing the screw.

The diameter of the hole shall not be drilled or enlarged to insert a screw of larger diameter than that inserted in the first attempt.

The pulling test is conducted with one screw only at the same time.

The screw or the plug shall not be lubricated before or during the attempt to insert the screw.

Licensed to: Koole, A.J. Mr.
Downloaded: 2019-05-21
Single user licence only, copying and networking prohibited

Perform a pull test on a screw which is screwed into the plug. The pulling shall continue until either:

— the pulling force in Table 7 for the grade has been reached or;

— the whole cylinder is removed or;

— the plug is removed from the cylinder or;

— the screw is completely withdrawn from the plug or;

— the screw is broken.

More than one pulling test is allowed on the same cylinder with different screw diameters within the time for the test according to the grade in Table 7.

The screw shall not reach the coupling area of the cylinder (to prevent damage to the housing).

The cylinder has to be put horizontally before applying the screw.

The screw shall be applied parallel (tolerance ±5°) to the rotation of the cylinder plug.

A torque of 12 + 3 Nm is permitted to insert the screw. The tool shall be specified in the test report.

Net time is defined as the maximum time for active testing.

The time starts when the screw touches the cylinder and ends when:

— the maximum time is achieved;

— the follower turned with a torque of max 5 Nm in 360° or;

— the angle corresponding to the normal turning of the cylinder or;

— termination by the test operator.

The time restarts when the pulling force starts to pull. The time will be stopped when the screw is out of the cylinder. If a second attempt with an additional screw will be made, the time shall restart when screwing in the additional screw.

The pulling force shall linearly increase from 0 kN up to 15 kN within a period of 30 s ± 5 s. The maximum force shall be held for 5 s.

5.10.5 Torque resistance of plug/cylinder

5.10.5.1 General

The torque resistance of plug and/or cylinder shall conform to 4.6.6 for key related security and 4.8.6.for attack related security. The cylinders shall be mounted in the metal fixture illustrated in Figure 7 in accordance with the manufacturer's instructions. A torque shall be applied to the plug as described in 5.10.5.2 or 5.10.5.3.

5.10.5.2 Torque resistance applied with any tool

The MC shall be in the mode where all blocking parts (mechanical and/or electrically operated) are in action.

A torque from Table 4 or 7 shall be applied linearly without shocks to the plug by an appropriate tool inserted in the keyway. The maximum torque shall be held for 5 s.

If the cylinder does not have a keyway the torque shall be applied to those parts of the cylinder that transmit the torque for mechanical operation.

Licensed to: Koole, A.J. Mr.
Downloaded: 2019-05-21
Single user licence only, copying and networking prohibited

5.10.5.3 Torque resistance applied with key blank

The test is performed to MC with both mechanical and electrical operated blocking and for grade A, B, C or D of 4.8.6 the cylinder shall be in the mode where only the electrically blocking parts are in action.

A torque from Table 7 shall be applied linearly without shock to the plug by a key with right mechanical code but wrong electrical code inserted in the keyway. The torque shall be held for 5 s. Increase the torque with the same speed until the key breaks. The torque shall not be transferred to the cam. If the key breaks with a torque less than the torque required in Table 7 the electrically operated blocking shall be checked by applying the torque directly to the plug (with appropriate means).

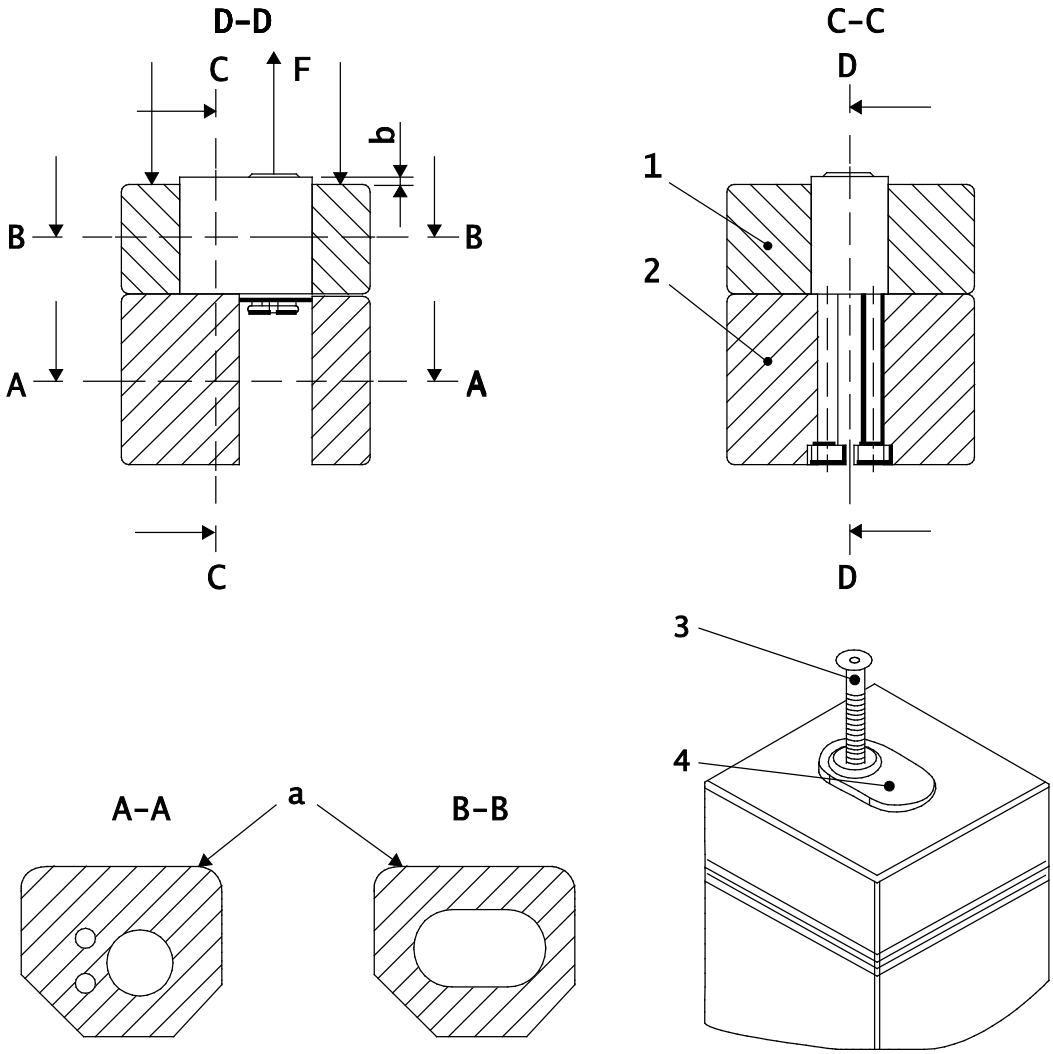

Figure 7 — Torque resistance fixture

5.10.6 Attack by hits test

This test is to verify that the electrical operated locking element is resistant against attacks caused by hits direct to the cylinder, key, knob, thumb turn and device visible after mounting on the fixture.

For attack resistance grades A, B, C, D two cylinders shall be tested by two testers independent of each other as described in Annex C, Tables C.1 and C.2.

Licensed to: Koole, A.J. Mr.
Downloaded: 2019-05-21
Single user licence only, copying and networking prohibited

The cylinders shall be mounted in a fixture with provision for the fitting of any necessary reinforcement or protection devices supplied with the cylinder. This test rig should conform to the installation of the MC in practice.

The manual attack shall be performed using the tools from the tool set for hits specified in annex B, table B.1 to move the electrically operated blocking element in order to operate the cylinder or cam mechanism with a key with right mechanical code but with wrong electronic code or with the tools using a torque of approx. 1 Nm.

The hits shall not give marks on the objects that can be related to the hits.

Verify with 5.2.1 to 5.2.4 a) and b) after the test that the MC shall not operate without the correct key or by its knob. It is not necessary to operate the MC after the test with the correct key.

5.10.7 Attack by vibrations test

This test is to verify that the electrical operated locking element is resistant against attacks caused by vibrations direct to the cylinder, key, knob, thumb turn and device visible after mounted on the fixture.

For attack resistance grades A, B, C, D, two cylinders shall be tested by two testers independent of each other as described in Annex C, Table C.1 and C.2.

The cylinders shall be mounted in a fixture with provision for the fitting of any necessary reinforcement or protection devices supplied with the cylinder. This test rig should conform to the installation of the MC in practice.

A manual attack shall be performed using the tools out of tool set for vibration specified in Annex B, Table B.2 to move the electrically operated blocking element so it is possible to operate the cylinder or cam mechanism with a key with right mechanical code but with wrong electronic code or with the tools using a torque of approx. 1 Nm.

The vibrations shall not give marks on the objects that can be related to the vibrations.

Verify with 5.2.1 to 5.2.4, a) and b) after the test that the MC shall not operate without the correct key or by its knob. It is not necessary to operate the MC after the test with the correct key.

5.10.8 Increased voltage attack test

This test is to verify that the electronic blocking element shall not move from a closed to an open position when a voltage higher than that for which the MC is rated is applied through contacts or by other means.

The MC shall be installed in a test rig in accordance with the manufactures instruction as it is intended for normal use (door, lock, escutcheons).

Apply the appropriate voltage, as specified in 4.8.8, to electric contacts accessible from the secured side or other visible parts of MC. The time of the current supply is 10 s.

For MC with mechanical operated blocking the electronic dummy key shall be used.

The added voltage and currency shall be limited in the test apparatus.

Verify with 5.2.1 to 5.2.4 a) and b) after the test that the MC shall not operate without the correct key or by its knob. It is not necessary to operate the MC after the test with the correct key.

5.10.9 Electrostatic discharge attack test

This test is to verify that the electronic blocking element shall not move from a closed to an open position by using high voltage electric discharge.

The MC shall be installed in a test rig in accordance with the manufactures instruction as it is intended for normal use (door, lock, escutcheons).

Licensed to: Koole, A.J. Mr.
Downloaded: 2019-05-21
Single user licence only, copying and networking prohibited

Test the MC in accordance with EN 61000-4-2 from the secured side to visible parts of MC, with voltage levels defined in Table 5.

For MC with mechanical operated blocking the electronic dummy key shall be used.

Test the MC for ungrounded and grounded equipment as follows:

— polarity: + & -

— apply discharges to the parts of MC accessible after installation

— number of discharges: 10 for each position, voltage and polarity

— time interval between successive discharges: ≥ 1 s

— maximum five positions

After each discharge, verify with 5.2,1 to 5.2.4 a) and b) that the MC shall not operate without the correct key or by its knob. It is not necessary to operate the MC after the test with the correct key.

5.10.10 Magnetic field attack test

This test is to verify that the electronic blocking element shall not move from a closed to an open position by a magnetic field of a permanent magnet from any direction of the MC available after installation.

If the MC has mechanical operated blocking, the test should consider the use of a key with the right mechanical code but with no, or the wrong, electric code.

The MC shall be installed in the test rig made of non-magnetic material in accordance with the manufacturer's instructions.

The test shall be done by two permanent magnet of different sizes:

— field strength of 0,6 T ± 10 % by a distance of 0 mm, having a diameter size between 10 mm and 20 mm and a maximum lifting force on iron of 100 N;

— field strength of 0,6 T ± 10 % by a distance of 0 mm, having a diameter size between 40 mm and 60 mm and a lifting force on iron between 400 and 600 N.

The electronic blocking element shall be tested using the permanent magnets being placed in any direction and as close as possible to the specimen accessible after installation without removing any escutcheons or protective security furniture recommended by the manufacturer.

During the attack try to operate the cylinder using the key or tools specified in Annex B, Table B.3. Use the permanent magnet to open the cylinder within an overall time of 2 min. The torque on the key or attack tool is restricted to only torque produced by fingers applied to the key bow (approx. 1 Nm).

Verify with 5.2.1 to 5.2.4 a) and b) after the test that the MC shall not operate without the correct key or by its knob. It is not necessary to operate the MC after the test with the correct key.

5.10.11 Minimum knob transmission

The MCs shall conform to the requirements of 4.2.7.

Test the MC when fixed as in Figure 7 — Torque resistance fixture.

Test the MC as follows:

1. Check the function of the MC according to the manufacturer's instructions after mounted in the test fixture.

2. Check that min 1.5 Nm can be transmitted to the cam using the electronic key (MC unblocked)

Licensed to: Koole, A.J. Mr.
Downloaded: 2019-05-21
Single user licence only, copying and networking prohibited

3. Rotate the knob in one direction to overcome the clutch of the MC 100 cycles in 20 minutes with start every 12 second.

4. Check that min 1.5 Nm can be transmitted to the cam using the electronic key in the same direction as in 3. (MC unblocked)

Licensed to: Koole, A.J. Mr.
Downloaded: 2019-05-21
Single user licence only, copying and networking prohibited

6 Classification system

6.1 Classification

Classification of the MC and the electronic key shall be in accordance with the classification system as shown in Table 8 and as described in 6.2 to 6.9.

The MC and the electronic key may be classified independently from each other.

The grade awarded under each character will be the lowest performance level achieved.

Table 8 — Classification system

1	2	3	4	5	6	7	8
Category of use	Durability	Fire/smoke resistance	Environmental resistance	Mechanical key related security	Electronic key related security	System management	Attack Resistance

6.2 Category of use: (1st character)

The MC and the electronic key shall be classified in category of use grade 1 for use by people with a high incentive to exercise care and with a small chance of misuse in accordance with 4.2.

6.3 Durability (2nd character):

Three grades of durability are identified as follows:

— Grade 4: 25 000 test cycles;

— Grade 5: 50 000 test cycles;

— Grade 6:100 000 test cycles.

6.4 Fire/smoke resistance (3rd character):

Three grades of fire/smoke resistance are identified; reference is made to Annex A:

— Grade 0: not approved for use on fire/smoke door assemblies;

— Grade A: suitable for use on smoke door assemblies;

— Grade B: for use on fire and smoke door assemblies.

6.5 Environmental resistance (4th character):

Five grades (grade 0 to grade 4) of environmental resistance are identified in accordance with Tables 2 and 3.

6.6 Mechanical key related security (5th character):

Six grades (grade A to grade F) of mechanical key related security are identified in accordance with Table 4.

6.7 Credential related security (6th character):

Five grades (grade 0, A to D) of credential related security are identified in accordance with Table 5.

Licensed to: Koole, A.J. Mr.
Downloaded: 2019-05-21
Single user licence only, copying and networking prohibited

6.8 System Management (7th character):

Four grades (grade 0 to grade 3) of system management are identified in accordance with Table 6.

6.9 Attack resistance (8th character):

Five grades (grade 0, A to grade D) of attack resistance are identified in accordance with Table 7.

6.10 Example of classification

Table 9 — Example of classification of MC

1	2	3	4	5	6	7	8
Category of use	Durability	Fire/smoke resistance	Environmental resistance	Mechanical key related security	Credential related security	System management	Attack Resistance
1	**5**	**0**	**3**	**E**	**D**	**1**	**C**

Table 10 — Example of classification of electronic key

1	2	3	4	5	6	7	8
Category of use	Durability	Fire/smoke resistance	Environmental resistance	Mechanical key related security	Credential related security	System management	Attack Resistance
1	**5**	**0**	**3**	**E**	**D**	**1**	**0**

7 Marking

The classification in Clause 6 shall be quoted in the accompanying documents relevant to the cylinder or in the product documents, on its labelling or packaging and/or by marking the product itself or by more than one of these methods.

Licensed to: Koole, A.J. Mr.
Downloaded: 2019-05-21
Single user licence only, copying and networking prohibited

Annex A
(normative)

Suitability for use on fire/smoke resistant doors

A.1 Three grades of fire/smoke resistance are identified:

— Grade 0: not approved for use on fire/smoke door assemblies;

— Grade A: for use on smoke door assemblies, based on the requirements of A.2;

— Grade B: for use on fire/smoke door assemblies "in accordance with the requirements in A.3".

A.2 Products for grade A shall fulfil one of the following requirements:

The material for the parts of the MC which are responsible for preventing any leakage of smoke shall have a melting point of not less than 300°C;

A smoke doorset incorporating a MC shall be subjected to a smoke test in accordance with EN 1634-3.

A.3 Products for grade B representative of their type shall have been subjected to a successful fire test, in accordance with EN 1634-1 or EN 1634-2, to prove the effect of the product on the fire resistance of the complete door assembly. It is not necessary for the product to be operable after such a fire test.

The cylinder should be tested with a battery as recommended in the product information.

In addition to the classification for suitability of fire doors the following information shall be included in the installation instructions:

— reference to the fire test report;

— type of test door for the product family (wood, metal sheet, etc.).

NOTE It is not necessary for the cylinder to operate after the fire test.

Licensed to: Koole, A.J. Mr.
Downloaded: 2019-05-21
Single user licence only, copying and networking prohibited

Annex B
(normative)

Tool sets for attack resistance tests

Table B.1 — Tool set to be used for hit attack test 5.10.6

Metal and Plastic hammer weight max 200 grams length max 250 mm		Only for hits
Tomahawk weight 70 grams Length max 300 mm	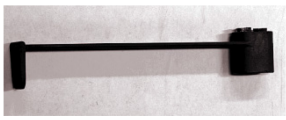	Only for hits
Screwdrivers, size 150 mm and 170 mm	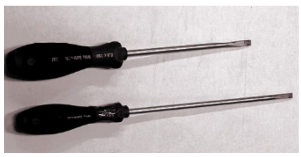	Only for turning/moving the plug/knob/thumb turn with a small torque (approx. 1 Nm)
Long nose pliers Length max 180 mm		Only for turning/moving the plug/knob/thumb turn with a small torque (approx.1 Nm)
Tweezers Length max 100 mm		For turning/moving/grabbing parts of the MC such as plug/knob/thumb turn
Electronic dummy key		Only for turning/moving the plug with a small torque (approx.1 Nm)

Table B.2 — Tool set to be used for vibration attack test 5.10.7

Cordless drill machine with impact function, limited to 25 000 hits per minute, and a pin with a diameter of 5 mm to transmit the vibrations. No drills		For vibration not visible after the attack time
Rubber adapter		For the purpose to be combined with the pin

Licensed to: Koole, A.J. Mr.
Downloaded: 2019-05-21
Single user licence only, copying and networking prohibited

Screwdrivers, size 150 mm and 170 mm	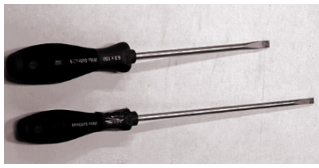	Only for turning/moving the plug/knob/thumb turn with a small torque (approx.1 Nm)
Long nose plier Length max 180 mm		Only for turning/moving the plug/knob/thumb turn with a small torque (approx. 1 Nm)
Tweezer Length max 100 mm		For turning/moving/grabbing parts of the MC such as plug/knob/thumb turn
Electronic dummy key		Only for turning/moving the plug with a small torque (approx. 1 Nm)

Table B.3 — Tool set to be used for magnetic attack test 5.10.10

Examples of permanent magnets maximum 0.6 T Dimensions diameter between 10 – 60 mm Maximum lifting force on iron 500N		
Screwdrivers, size 150 mm and 170 mm	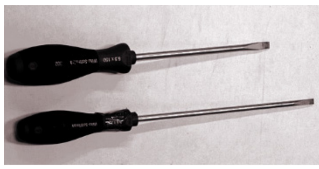	Only for turning/moving the plug/knob/thumb turn with a small torque (approx. 1Nm)
Long nose plier Length max 180 mm		Only for turning/moving the plug/knob/thumb turn with a small torque (approx. 1 Nm)
Tweezer Length max 100 mm		For turning/moving/grabbing parts of the MC such as plug/knob/thumb turn
Electronic dummy key		Only for turning/moving the plug with a small torque (approx. 1 Nm)

Licensed to: Koole, A.J. Mr.
Downloaded: 2019-05-21
Single user licence only, copying and networking prohibited

Annex C
(normative)

Table of test procedures

Table C.1 — Test procedures MC

Test cylinder number			**1**	**2**	**3**	**4**	**5**	**6**	**7**	**8**	**9**
Number of authorized keys			1	1	1	1	1	1	1	1	1
Number of keys with right mechanical but wrong electronic codes			1		1				1		
Number of keys with wrong mechanical but right electronic codes					1+1						
Clause	**Test clause**	**Test**	**sequence**								
	5.2	Operational test		x	x	x	x	x	x	x	
4.2.3	5.10.5.3	Wrong electronic code	x								
4.2.4	5.4.3	Bump Tests	x								
4.2.5	5.4.4	Vibration test	x								
4.2.6	5.10.9	ESD	x								
4.2.7	5.2.2 5.2.4	Minimum knob/thumb turn transmission		x							
4.3	5.5	Durability test			x						
4.5.1	5.7.1	Corrosion test				x					
4.5.2	5.7.2	Resistance of MC against water					x				
4.5.3	5.7.3	Dry heat: Cylinder					x				
4.5.4	5.7.4	Cold test: Cylinder					x				
4.5.5	5.7.5.	Damp heat cycle Cylinder					x				
4.6.6	5.8.3	Torque resistance of cylinder (plug)						x			
4.6.7	5.8.7	Operation of security mechanism (inter-passing)			x						
4.7	5.9	Audit trail and time zone capability	x								
4.8.2	5.10.1	Drilling test		x							
4.8.3	5.10.2	Chisel test			x						
4.8.4	5.10.3	Twisting				x					
4.8.5	5.10.4	Plug extraction					x				
4.8.6	5.10.5.1	Torque resistance MC/plug						x			
4.8.6	5.10.5.2	Torque resistance with electronic dummy key						X			
4.8.7	5.10.6	Attack by hits (manual) Tester 1								x	x
		Attack by hits (manual) Tester 2								x	x
4.8.8	5.10.7	Attack by vibrations Tester 1								x	x

Licensed to: Koole, A.J. Mr.
Downloaded: 2019-05-21
Single user licence only, copying and networking prohibited

Test cylinder number			**1**	**2**	**3**	**4**	**5**	**6**	**7**	**8**	**9**
		Attack by vibrations Tester 2								x	x
4.8.9	5.10.8	Increased voltage attack								x	x
4.8.10	5.10.9	ESD							x		
4.8.11	5.10.10	Magnetic field attack Tester 1								x	x
		Magnetic field attack Tester 2								x	x
The sequence of the tests and the number of samples may vary depending on the design and function of the cylinder.											

Table C.2 — Test procedures electronic keys

Test key number			1	2	3	4	5	6 -15
Number of authorized keys			1	1	1	1	1	10
Clause	Test clause	Test						
4.2.1	5.4.1	Key strength	x					
4.2.2	5.4.2	Stability of electronic keys						x
4.5.6	5.7.6	Resistance of electronic key against water		x				
4.5.3	5.7.3	Dry heat: key			x			
4.5.4	5.7.4	Cold test: key				x		
4.5.5	5.7.5	Damp heat cycle key					x	

Licensed to: Koole, A.J. Mr.
Downloaded: 2019-05-21
Single user licence only, copying and networking prohibited

Annex D
(informative)

Installation instructions

Information and installation guidance and/or product information to the MC and its key.

D.1 Before fitting a MC to a fire/smoke resisting door, the fire certification should be examined, to ensure conformity.

D.2 Care should be taken to ensure that any seals or weather-stripping fitted to the complete door assembly, does not inhibit the correct operations of the MC.

D.3 Where the MC is manufactured in more than one size it is critical that the correct size is selected.

D.4 The instructions should be carefully followed during installation. These instructions and any maintenance instructions should be passed on by the installer to the user.

D.5 Care should be taken to ensure that no projection of the MC and associated parts, can prevent the door swinging freely.

D.6 All components necessary for the specific installation should be fitted in order to ensure compliance with this European Standard.

Licensed to: Koole, A.J. Mr.
Downloaded: 2019-05-21
Single user licence only, copying and networking prohibited

Annex E
(informative)

Manufacturer's declaration of compliance

We declare that the following product:_____

conforms to EN 15684:201X

with the following classification:

1	2	3	4	5	6	7	8

Box	**Classification**	**Grade or category**
1	Category of use	1
2	Durability	4, 5 or 6
3	Fire/smoke resistance	0, A or B
4	Environmental resistance	0 to 4
5	Mechanical key related security	A to F
6	Credential related security	0, A to D
7	System management	0 to 3
8	Attack Resistance	0, A to D

and the following others requirements not indicated in this standard:

[specify:.....]

when used for the following purpose:

Evidence of standards compliance:

□ Type testing by Manufacturer

□ Type testing by Manufacturer to EN ISO/IEC 17025

□ Type testing by accredited laboratory *[Lab. ref:.....]*

□ Regular audit testing by Manufacturer

□ Regular audit testing by Manufacturer to EN ISO/IEC 17025

□ Regular audit testing by accredited laboratory *[Lab. ref:.....]*

□ Other *[specify:.....]*

Licensed to: Koole, A.J. Mr.
Downloaded: 2019-05-21
Single user licence only, copying and networking prohibited

Evidence of quality compliance :

□ Manufacturer's own quality system

□ Manufacturer's quality system to EN ISO 9001

□ Manufacturer's quality system to EN ISO 9001 with Independent quality assessment

[3rd Party ref: …… .....]

□ Other *[specify:.....]*

Evidence of marking compliance :

□ None

□ Quality label *[specify: .....]*

□ Other *[specify:.....]*

CE marking according to CPR is not applicable.

Signature: Date:

Position:

Licensed to: Koole, A.J. Mr.
Downloaded: 2019-05-21
Single user licence only, copying and networking prohibited

Annex F
(informative)

Examples of calculation of effective code variations for ICC.

The authorization of a particular RFID transponder for a particular MC is checked by reading in all the necessary data from the RFID card and subsequently comparing the data with the parameters of the MC. Commonly used authorization data on the card are Card Identification Number, Group Membership, Time Zones, Door Numbers, Project Code and Manufacturer Code. Commonly used parameters of the MC are Door Identification Number, Group Membership, Time Models, Card Identification Numbers, Project Code and Manufacturer Code.

Example 1

In a classical, access control software-like configuration, the RFID card bears only a Card Configuration Number, which is stored in an encrypted area on the RFID. The information whether RFID is authorized for a particular MC, is solely stored on the MC in the list of authorized Card Identification Numbers ("Whitelist"). In addition to that, sometime models and references to them are stored as well on the MC.

For the purpose of calculating the effective code variations, time dependent data is ignored.

Since both the data on the RFID and the parameters of the MC are usually coded binary and the corresponding limits are powers of two, the calculation of effective code variations is most conveniently carried out for powers of two as well:

In this classical setup, the following example is calculated:

Data on RFID Card:

Card Identification Number: 32 Bit
Encryption Key Length: 128 Bit

Parameters of MC:

Door Identification Number: 16 Bit
Card Identification Numbers: 65536 x 32 Bit (i.e. the whitelist of the MC is at the maximum 65536 = 2^{16} entries long)

The code variations for the data on the RFID card in this example are:

Code Variations RFID = 2^{32}

which is a quite a large number.

The effective code variations are much smaller:

For the match of the card identification number, the effective code variations are

$$\frac{2^{32}}{65536} = \frac{2^{32}}{2^{16}} = 2^{32-16} = 2^{16}$$

because there are in the worst case 65536 possibilities to match the RFID's Card Identification Number, since the Whitelist may be 65536 entries long.

Therefore, the effective code variations for this classical setup are "only" equal to 2^{16} = 65536.

Licensed to: Koole, A.J. Mr.
Downloaded: 2019-05-21
Single user licence only, copying and networking prohibited

However, provided that the encryption key to access the data on the RFID is not a constant and may vary at least between different projects, the total effective code variations become

$2^{32+128} = 2^{160} = 1.5 \times 10^{48}$

which is a huge number.

Example 2

In a typical setup, an authorized RFID transponder must first bear the identical Project Code and Manufacturer Code as the MC in order to be authorized. An additional criteria is that either of the following is true:

— the RFID's Card Identification Number is contained in the list of the MC's authorized Card Identification numbers ("Whitelist"), or

— at least one of the groups within the Group Membership of the RFID is also within the Group Membership of the MC, or

— the Door Identification Number is within the list of Door Numbers on the RFID transponder.

In addition to these criteria, the current time, when the authorization process takes place, must be within the specified time limits which are contained either on the transponder or on the MC or in a combination of both.

For the purpose of calculating the effective code variations, time dependent data is ignored.

Since both the data on the RFID and the parameters of the MC are usually coded binary and the corresponding limits are powers of two, the calculation of effective code variations is most conveniently carried out for powers of two as well:

In the above typical setup the following example is calculated:

Data on ICC:

Card Identification Number: 16 Bit
Group Membership: 256 Bit (i.e. ICC may belong to any subset of 256 groups)
Door Numbers: 8 x 16 Bit (i.e. Up to 8 individual door numbers may be authorized in addition to the group membership)
Project Code: 32 Bit
Manufacturer Code: 32 Bit

Parameters of MC:

Door Identification Number: 16 Bit
Group Membership: 256 Bit (i.e. MC may belong to any subset of 256 groups)
Card Identification Numbers: 1024 x 16 Bit (i.e. the whitelist of the MC is at the maximum 1024 entries long)
Project Code: 32 Bit
Manufacturer Code: 32 Bit

The code variations of the ICC in this example are:

Code Variations RFID = $2^{16 + 256 + (8 \times 16) + 32 + 32}$, which is a very large number.

The effective code variations are much smaller:

The Manufacturer Code may not be regarded as a Code Variation, since it is a constant and may become publicly known.

Since the project code has to match exactly, the effective code variations for this requirement are equal to 2^{32}.

Licensed to: Koole, A.J. Mr.
Downloaded: 2019-05-21
Single user licence only, copying and networking prohibited

In the first case, where the ICC Card Identification Number matches, the effective code variations are $\frac{2^{16}}{1024} = \frac{2^{16}}{2^{10}} = 2^{16\text{-}10} = 2^{6} < \text{CDATA} > < / \text{CDATA} > \frac{2^{16}}{1024} = \frac{2^{16}}{2^{10}} = 2^{16-10} = 2^{6}$, because there are in the worst case 1024 possibilities to match the ICC Card Identification Number, since the Whitelist may be 1024 entries long. In the second case, where the group membership is matched, the effective code variations are equal to 2, since, in the worst case, the MC may be a member of all groups, so any code except zero would match. In the last case, where the Door Identification Number matches the list of Door Numbers, the effective code variations are $\frac{2^{16}}{8} = \frac{2^{16}}{2^{3}} = 2^{16\text{-}3} = 2^{13} < \text{CDATA} > < / \text{CDATA} > \frac{2^{16}}{8} = \frac{2^{16}}{2^{3}} = 2^{16-3} = 2^{13}$. Since the three authorization options are alternative, the least favourable option contributes to the total effective code variations, which is the group matching.

Therefore, for this example, the effective code variations are = 2^{32} x 2 = 2^{32+1} = 2^{33} = 8.6 10^{9}, which is still a very high number.

For MCs that incorporate encryption, the variations of the encryption key contribute to the effective code variations as well.

Licensed to: Koole, A.J. Mr.
Downloaded: 2019-05-21
Single user licence only, copying and networking prohibited

Bibliography

[1] DIN 7504 K, *N.P.Q.,* Self Drilling Screw

[2] prEN 16867:2018, *Building hardware - Mechatronic door furniture - Requirements and test methods*

Licensed to: Koole, A.J. Mr.
Downloaded: 2019-05-21
Single user licence only, copying and networking prohibited