CEN/TC 33 Secretariat

"Doors, windows, shutters, building hardware and curtain walling"

"Portes, fenêtres, fermetures, quincaillerie de bâtiment et façades rideaux"

"Türen, Tore, Fenster, Abschlüsse, Baubeschläge und Vorhangfassaden"

CEN/TC 33 N 3929

2020-05-19

Launching of the Formal Vote on WI 00033559 – EN 17352, Power operated pedestrian entrance control equipment – Safety in use – Requirements and test methods:

- **CEN/TC 33 – Draft Decision D 1398c/2020**
- **Revised draft for the Formal Vote**
- **Follow up of the comments received during the CEN Enquiry**

Action: **Vote CIB – Deadline: 2020-07-01**

Source: CEN/TC 33/WG 9

Comments: I draw your attention: this consultation is the last chance to introduce a technical change. After the Formal Vote, if it is positive, no more technical comments are taken into account for the ratification of the standard.

afnor NORMALISATION

Your correspondent : Nathalie GIRARDOT
ligne directe : +33 (0)1 41 62 86 70
nathalie.girardot@afnor.org

Secretary : Élisabeth DERCHÉ
ligne directe : +33 (0)1 41 62 81 45
elisabeth.derche@afnor.org

11, rue Francis de Pressensé – F-93571 La Plaine Saint-Denis Cedex – Tél : +33 (0)1 41 62 80 00 – Fax : +33 (0)1 49 17 90 00
SIRET 775 724 818 00205

CEN/TC 33 Draft Decision D 1398c/2020
Per correspondence
Issue date: 2020-05-19
Deadline: 2020-07-01

SUBJECT: **CEN/TC 33 – WG 9 - FpEN 17352, Power operated pedestrian entrance control equipment – Safety in use – Requirements and test methods - WI 00033559**

DRAFT DECISION 1398c taken by CEN/TC *33* on 2020-07-dd

Subject: Decision on the future of **FprEN 17352** after CEN enquiry

CEN/TC *33, Doors, windows, shutters, building hardware and curtain walling*

- considering CEN/CENELEC Internal Regulations - Part 2, sub-clause 11.2.5, which lays down the rules related to the Formal Vote;
- the work item being approved in the programme of work of the Technical Committee;
- considering resolutions BT 34/2002, BT 42/2003 and related document BT N 6962 concerning timeframes for the development of ENs;

decides to launch the Formal Vote on **FpEN 17352**, Power operated pedestrian entrance control equipment – Safety in use – Requirements and test methods, doc. CEN/TC 33 N 3998 *(target date in Projex stage 45.99, 2020-10-23).*

The decision was taken by *unanimity or simple majority with N positive votes, N negative vote(s) and N abstention(s).*

To vote using CIB

CEN/TC 33

Date: May 2020

FprEN 17352:2020

WI 00033559

Secretariat: AFNOR

Power operated pedestrian entrance control equipment – Safety in use – Requirements and test methods

Équipement motorisé de contrôle d'accès pour piétons – Sécurité d'utilisation – Exigences et méthodes d'essai

ICS:

Contents

Page

European foreword 4
Introduction 5
1 Scope 6
2 Normative references 7
3 Terms and definitions 8
4 List of significant hazards 10
4.1 General 10
4.2 Crushing, shearing and drawing-in hazards 10
4.3 Impact and trapping hazards 10
4.4 Hazards caused by source of energy and power controls 11
4.5 Hazards caused by inadequate functional safety 11
4.6 Hazards caused by manual operation 11
4.7 Hazards caused by loss of stability 11
4.8 Hazards caused by glazing material 11
4.9 Hazards caused by modification of settings 12
4.10 Hazards caused by imprisonment 12
4.11 Hazards caused by shape of the equipment 12
5 Safety requirements and/or protective/risk reduction measures 12
5.1 General 12
5.2 Crushing, shearing and drawing-in 12
5.2.1 General 12
5.2.2 Safety distances 13
5.2.3 Guards 20
5.2.4 Low energy mode of operation 21
5.2.5 Electro-Sensitive Protective Equipment (ESPE) 21
5.3 Impact and trapping 22
5.4 Source of energy and power controls 22
5.5 Inadequate functional safety 23
5.6 Manual operation 23
5.7 Loss of stability 24
5.8 Glazing material 25
5.9 Modification of settings 25
5.10 Imprisonment 25
5.11 Shape of the equipment 26
5.12 Use in escape routes and emergency exits 26
6 Verification of the safety requirements and/or protective/risk reduction measures 26
6.1 General 26
6.2 Crushing, shearing and drawing-in 27
6.2.1 General 27
6.2.2 Safety distances 27
6.2.3 Guards 27
6.2.4 Low energy mode of operation 27
6.2.5 Electro-Sensitive Protective Equipment (ESPE) 27
6.3 Impact and trapping 27

6.4 Source of energy and power controls ... 27
6.5 Functional safety ... 28
6.6 Manual operation ... 28
6.7 Loss of stability ... 28
6.8 Glazing material ... 28
6.9 Modification of settings ... 28
6.10 Imprisonment ... 28
6.11 Shape of the equipment ... 28

7 Information for use ... 29
7.1 General ... 29
7.2 Instruction handbook ... 29
7.3 Marking ... 31

Annex A (normative) Power operated pedestrian entrance control equipment to be used in escape routes and emergency exits ... 32

A.1 General ... 32

A.2 Functional safety ... 32

A.3 Electrical power supply ... 32

A.4 Break out function ... 32

A.5 Locking systems for the break out function ... 33

A.6 Device to release the electric locking mechanism of the break-out function ... 33

A.7 Operating mode selection ... 34

A.8 Durability ... 34

Annex B (normative) Reference test body ... 35

Annex C (normative) Limitation of forces ... 38

C.1 Permissible dynamic forces ... 38

C.2 Permissible static forces ... 39

C.3 Impact force measuring equipment ... 39

C.4 Impact force measuring points ... 40

Annex D (normative) Stability measuring points ... 44

Annex E (informative) Log book ... 46

Annex F (informative) Examples of product variations ... 47

F.1 Turnstile variations ... 47

F.2 Swing lane variations ... 48

F.3 Retractable lane variations ... 48

Annex G (informative) Example of calculation of the Mass Moment of Inertia ... 49

Annex H (informative) Relationship between hazards, hazardous situations and hazardous events covered by this standard and relevant requirements and test methods subclauses ... 55

Annex ZA (informative) Relationship between this European Standard and the essential requirements of Directive 2006/42/EC aimed to be covered ... 56

Bibliography ... 58

European foreword

This document (FprEN 17352:2020) has been prepared by Technical Committee CEN/TC 33 “Doors, windows, shutters, building hardware and curtain walling”, the secretariat of which is held by AFNOR.

This document is currently submitted to the Formal Vote.

This document has been prepared under a mandate given to CEN by the European Commission and the European Free Trade Association, and supports essential requirements of EU Directive(s).

For relationship with EU Directive(s), see informative Annex ZA, which is an integral part of this document.

Introduction

This standard is a type C standard as stated in EN ISO 12100:2010.

This document is of relevance, in particular, for the following stakeholder groups representing the market players with regard to machinery safety:

— machine manufacturers (small, medium and large enterprises);

— health and safety bodies (regulators, accident prevention organizations, market surveillance etc.).

Others can be affected by the level of machinery safety achieved with the means of the document by the above-mentioned stakeholder groups:

— machine users/employers (small, medium and large enterprises);

— machine users/employees (e.g. trade unions, organizations for people with special needs);

— service providers, e.g. for maintenance (small, medium and large enterprises);

— consumers (in case of machinery intended for use by consumers).

The above-mentioned stakeholder groups have been given the possibility to participate at the drafting process of this document.

The machinery concerned and the extent to which hazards, hazardous situations and hazardous events are covered are indicated in the scope of this document.

When requirements of this type-C standard are different from those which are stated in type-A or type-B standards, the requirements of this type C standard take precedence over the requirements of the other standards for machines that have been designed and built according to the provisions of this type-C standard.

1 Scope

This document specifies requirements and test methods for power operated pedestrian entrance control equipment such as turnstiles, swing lanes and retractable lanes. Such products may be operated electro-mechanically or electro-hydraulically. They are usually used in order to allow authorized persons to switch from one zone to another zone one at the time.

This document covers safety in use of power operated pedestrian entrance control equipment used for normal access as well as in escape routes and emergency exits.

This document deals with all significant hazards, hazardous situations and events relevant to power operated pedestrian entrance control equipment when they are used as intended and under conditions of misuse which are reasonably foreseeable as identified in Clause 4.

All lifetime phases of the machinery including transportation, assembly, dismantling, disabling and scrapping are considered by this standard.

This document does not apply to:

— power operated pedestrian doors according to EN 16005 and EN 16361;

— external and internal pedestrian doors according to EN 14351-1 and EN 14351-2;

— mechanical turnstiles with electric/electronic unlocking system;

— vertically moving power operated pedestrian entrance control equipment;

— power operated pedestrian entrance control equipment used in industrial processes;

— power operated pedestrian entrance control equipment for people with special needs;

— platform doors for subway and railway.

This document does not deal with any specific requirements on noise emitted by a power operated pedestrian entrance control equipment as their noise emission is not considered to be a relevant hazard.

This document is not applicable to power operated pedestrian entrance control equipment manufactured before the date of publication of the standard.

In general, this standard does not take into account:

— children playing with the equipment;

— the use of the equipment by children younger than 8 years without supervision.

The level of requirements of very vulnerable people may extend beyond the level addressed in this standard.

NOTE Vulnerable people are persons having reduced physical, sensory or mental capabilities (e.g. partially disabled, elderly having some reduction in their physical and mental capabilities), or lack of experience and knowledge (e.g. children between 8 years and 14 years). Power operated pedestrian entrance control equipment are according to their function and purpose not designed to serve the needs of vulnerable people. Where accessible entrance control equipment is required, the needs of vulnerable people has to be taken into account already at the design stage as indicated in prEN 17210:2019 "Accessibility and usability of the built environment – Functional requirements.

2 Normative references

The following documents are referred to in the text in such a way that some or all of their content constitutes requirements of this document. For dated references, only the edition cited applies. For undated references, the latest edition of the referenced document (including any amendments) applies.

CLC/TS 61496-3:2008, *Safety of machinery — Electro-sensitive protective equipment — Part 3: Particular requirements for Active Opto-electronic Protective Devices responsive to Diffuse Reflection (AOPDDR) (IEC 61496-3:2008)*

EN 349:1993+A1:2008, *Safety of machinery — Minimum gaps to avoid crushing of parts of the human body*

EN 12150-2:2004, *Glass in building — Thermally toughened soda lime silicate safety glass — Part 2: Evaluation of conformity/Product standard*

EN 12978:2003+A1:2009, *Industrial, commercial and garage doors and gates — Safety devices for power operated doors and gates — Requirements and test methods*

EN 13637:2015, *Building hardware — Electrically controlled exit systems for use on escape routes — Requirements and test methods*

EN 14449:2005, *Glass in building — Laminated glass and laminated safety glass — Evaluation of conformity/Product standard*

EN 60335-2-103:2015, *Household and similar electrical appliances — Safety — Part 2-103: Particular requirements for drives for gates, doors and windows (IEC 60335-2-103:2006, modified + A1:2010, modified)*

EN 60529:1991, *Degrees of protection provided by enclosures (IP Code) (IEC 60529:1989)*

EN 60529/A1:2000, *Degrees of protection provided by enclosures (IP Code) (IEC 60529/AMD1:1999)*

EN 60529/A2:2013, *Degrees of protection provided by enclosures (IP Code) (IEC 60529/AMD2:2013)*

EN 60664-1:2007, *Insulation coordination for equipment within low-voltage systems — Part 1: Principles, requirements and tests (IEC 60664-1:2007)*

EN ISO 4413:2010, *Hydraulic fluid power — General rules and safety requirements for systems and their components (ISO 4413:2010)*

EN ISO 4414:2010, *Pneumatic fluid power — General rules and safety requirements for systems and their components (ISO 4414:2010)*

EN ISO 12100:2010, *Safety of machinery — General principles for design — Risk assessment and risk reduction (ISO 12100:2010)*

EN ISO 13849-1:2015, *Safety of machinery — Safety-related parts of control systems — Part 1: General principles for design (ISO 13849-1:2015)*

EN ISO 13857:2008, *Safety of machinery — Safety distances to prevent hazard zones being reached by upper and lower limbs (ISO 13857:2008)*

3 Terms and definitions

For the purposes of this document, the terms of EN 12100:2010 and the following apply.

ISO and IEC maintain terminological databases for use in standardization at the following addresses:

— IEC Electropedia: available at http://www.electropedia.org/

— ISO Online browsing platform: available at http://www.iso.org/obp

3.1
break out
system whereby elements of a power operated pedestrian entrance control equipment can be pushed manually to open the escape way

Note 1 to entry: Examples of elements are bars, glass elements.

3.2
drive
motor and other components that control the movement of the moving parts

Note 1 to entry: Examples of components are gears, controls, brakes, components for power transmission from the drive to the leaf, entrapment protection systems.

3.3
drive unit
power operated mechanism, including controls, for moving, positioning and retaining the leaf/leaves

Note 1 to entry: Drive units include controls to move the door leaf, except entrapment protection systems.

3.4
leaf
moving element of the power operated pedestrian entrance control equipment

Note 1 to entry: A leaf can be a bar, a number of bars fixed to a vertical post, a grid, a panel etc.

3.5
main closing edge
edge of a leaf whose distance from the parallel opposing edge or surface determines the usable aperture

3.6
opposing closing edge
edge formed by the main closing edge of the counter closing leaf, fixed edge or surface against which the leaf is moving (e.g. frame, wall, fixed support, etc.)

3.7
operating cycle
movement of the power operated pedestrian entrance control equipment to allow a person to go through.

Note 1 to entry: A cycle is one passage for turnstiles and a complete opening and closing movement for swing lanes and retractable lanes.

3.8
power operated pedestrian entrance control equipment
equipment operated by an external energy supply (e.g. electrical) instead of manual or stored mechanical energy that allows persons with granted access to switch from one zone to another zone one at the time

Note 1 to entry: often activation of the movement of the equipment is done with a badge, ticket, biometrics, etc.

Note 2 to entry: It includes drive, bars or leaves, protective devices and any components needed for its safe operation

3.9
retractable lane
power operated pedestrian entrance control equipment with sliding elements moved for an operating cycle

Note 1 to entry: There is a wide range of design variations in this product group. See examples in F.3 (Figure F.5).

3.10
secondary closing edge
any other closing edge of the leaf which is not the main closing edge or the opposing closing edge

3.11
swing lane
power operated pedestrian entrance control equipment with elements (e.g. straight bars, curved bars, glass elements etc.) rotated for an operating cycle around an axis

Note 1 to entry: There is a wide range of design variations in this product group. See examples in F.2 (Figure F.4).

3.12
turnstile rotating in an angle
power operated pedestrian entrance control equipment with one or more elements (e.g. straight bars, curved bars, glass elements etc.) which rotates around a horizontal axis during an operating cycle

Note 1 to entry: There is a wide range of design variations in this product group. See examples in F.1 (Figure F.3).

3.13
vertically rotating turnstile
power operated pedestrian entrance control equipment which rotates around a vertical axis during an operating cycle.

Note 1 to entry: There is a wide range of design variations in this product group. See examples in F.1 (Figures F.1 to F.2).

4 List of significant hazards

4.1 General

This clause contains all the hazards, hazardous situations and events identified by risk assessment as significant for this type of machinery and which require action to eliminate or reduce the risk.

NOTE 1 As the main function of a power operated pedestrian entrance control equipment is to allow people to switch from one zone into another, the actual movement of the equipment can produce hazardous situations for users and persons in the vicinity which by nature cannot all be avoided by design.

NOTE 2 Additional visual or acoustic signage to guide users might be helpful.

Annex H is giving the relationship between the hazards listed in this clause, the requirements given in Clause 5 and the test methods described in Clause 6.

4.2 Crushing, shearing and drawing-in hazards

A hazard exists:

a) for vertically rotating turnstiles, turnstiles rotating in an angle, swing lanes and retractable lanes

- — between the main closing edge of any leaf and an opposing edge, and between secondary closing edges of leaf/leaves and opposing edges;
- — at gaps other than main closing gaps which vary in size and are accessible during the movement;
- — between elements passing each other or between leaf/leaves and fixed parts in the surrounding;

b) for vertically rotating turnstiles, turnstiles rotating in an angle and swing lanes

- — between leaf/leaves and obstacles within the movement area.

4.3 Impact and trapping hazards

This hazard is applicable to power operated pedestrian entrance control equipment.

An impact hazard exists:

- — between the leaf and a person going through the power operated pedestrian entrance control equipment;
- — and for turnstiles between the next person going through the turnstile and the stopped leaf which follows the passage of the first person.

The hazard of being trapped by the power operated pedestrian entrance control equipment exists between the moving leaves edges or between the main closing edge and the opposing closing edge such that part of the body is held by the leaf preventing release.

4.4 Hazards caused by source of energy and power controls

This hazard is applicable to power operated pedestrian entrance control equipment.

The source of energy used by the drive or drive unit for power operation can create hazards such as:

a) electric shock;

b) fire from overheating;

c) bursting, due to hydraulic or pneumatic over pressure;

d) failure of electrical, pneumatic and hydraulic equipment;

e) unsafe restart after unintended power supply interruption.

4.5 Hazards caused by inadequate functional safety

This hazard is applicable to power operated pedestrian entrance control equipment.

Inadequate functional safety of the protective equipment and of the safety related parts of the control system (SRP/CS) can lead to hazardous movement of the power operated pedestrian entrance control equipment.

4.6 Hazards caused by manual operation

This hazard is applicable to power operated pedestrian entrance control equipment.

When manual operation is foreseen, a power operated pedestrian entrance control equipment shall be moved manually (e.g. in case of power supply failure), hazardous situations exist when:

— power operation can occur during manual operation;

— the necessary manual effort is not related to the capability of the human body;

— speed during manual operation can become uncontrolled.

4.7 Hazards caused by loss of stability

This hazard is applicable to power operated pedestrian entrance control equipment.

Hazards exist if the power operated pedestrian entrance control equipment and its components, including its fixings for attachment to the building and fixing means of the leaf/leaves, are damaged or permanently deformed (e.g. by climbing over).

Hazards exist if power operated pedestrian entrance control equipment is subject to elastic deformations under operational forces or torques.

4.8 Hazards caused by glazing material

This hazard is applicable to power operated pedestrian entrance control equipment.

Hazards exist if glazing elements in power operated pedestrian entrance control equipment do not remain secured and if they produce sharp splinters, cutting edges or other dangerous parts in case of breaking.

Hazards also exist if transparent elements are not properly visible.

4.9 Hazards caused by modification of settings

This hazard is applicable to power operated pedestrian entrance control equipment.

Hazards exist if settings (e.g. for limiting forces, or options for fitted protective devices, or speed) can easily be modified.

4.10 Hazards caused by imprisonment

This hazard is applicable to power operated pedestrian entrance control equipment.

Hazards exist if a person can be imprisoned in the area between two power operated pedestrian entrance control equipment. In addition for turnstiles also between two leaves and the surrounding part of the equipment.

4.11 Hazards caused by shape of the equipment

This hazard is applicable to power operated pedestrian entrance control equipment.

Shearing, cutting or abrasion hazards exist if a person can get in contact with rough surfaces or sharp edges of power operated pedestrian entrance control equipment.

5 Safety requirements and/or protective/risk reduction measures

5.1 General

Power operated pedestrian entrance control equipment shall comply with the safety requirements and/or protective/risk reduction measures of this clause. In addition, the machine shall be designed according to the principles of EN ISO 12100:2010 for relevant but not significant hazards which are not dealt with by this document.

NOTE When used in this standard, the term “manufacturer” is intended as defined in the Machinery Directive.

5.2 Crushing, shearing and drawing-in

5.2.1 General

If crushing, shearing and drawing-in hazards exist they shall be safeguarded for 4.2 a) by one or a combination of the following measures:

— creating safety distances in accordance with 5.2.2;

— installing guards such as enclosures, covers, enclosing guards, fixed protection leaves in accordance with 5.2.3;

— low energy mode of operation in accordance with 5.2.4;

— protecting the movement area with Electro-Sensitive Protective Equipment (ESPE) in accordance with 5.2.5;

— limiting the forces generated by the leaf when meeting a person or an obstacle in accordance with Annex C.

For 4.2 b) they shall be safeguarded by one or a combination of the following measures:

— low energy mode of operation in accordance with 5.2.3;

— limiting the forces generated by the leaf when meeting a person or an obstacle in accordance with Annex C;

— protecting the movement area with Electro-Sensitive Protective Equipment (ESPE) in accordance with 5.2.5.

Low energy mode of operation by itself cannot be used to protect shearing hazard.

5.2.2 Safety distances

Crushing, shearing and drawing-in points shall be avoided by design and construction by achieving safe gaps and distances, which are related to the endangered parts of the human body, in accordance with Figures 1 to 7. Further safety distances are specified in EN 349:1993+A1:2008.

Safety requirements and/or protective/risk reduction measures shall be implemented up to a height of 2,5 m above the floor or any other permanent access level.

When safe gaps and distances are dependent on the installation and the site conditions, the installation instructions in accordance with 7.1 shall precisely describe the method of ensuring that the safe gaps and distances are effective after the installation is completed.

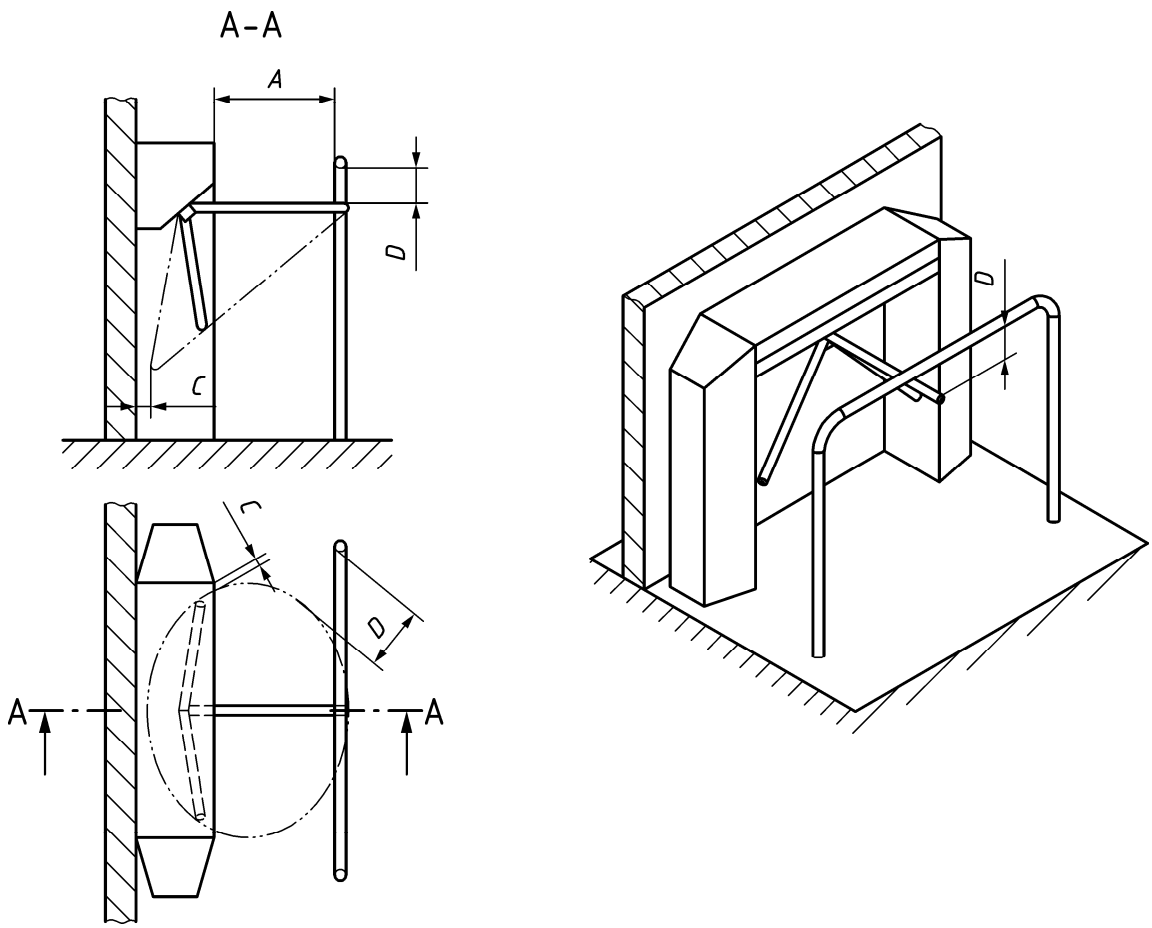

Key

Letter	Measure mm
A	≥ 500
C	≥ 25
D	≥ 50

Figure 1 — Turnstile rotating in an angle (with track divider)

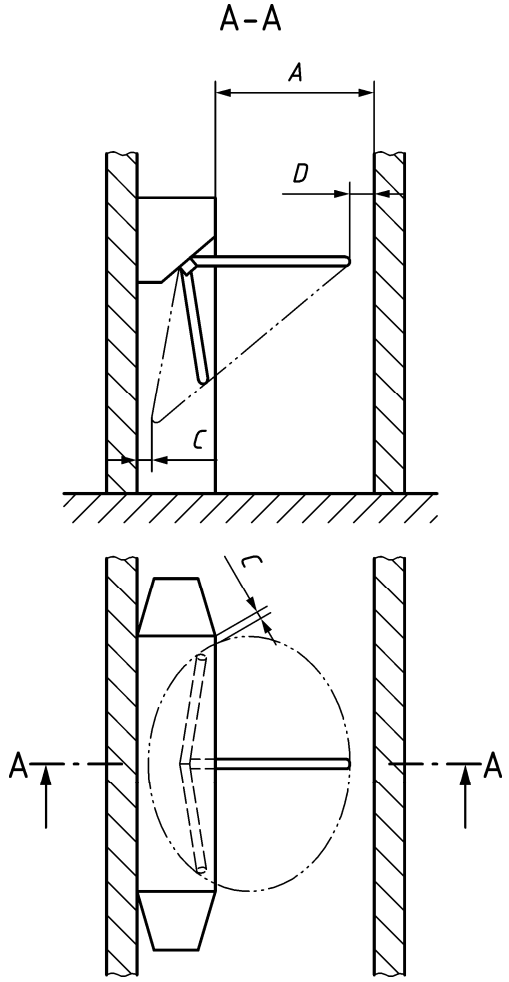

Key

Letter	Measure mm
A	≥ 500
C	≥ 25
D	≥ 50

Figure 2 — Turnstile rotating in an angle

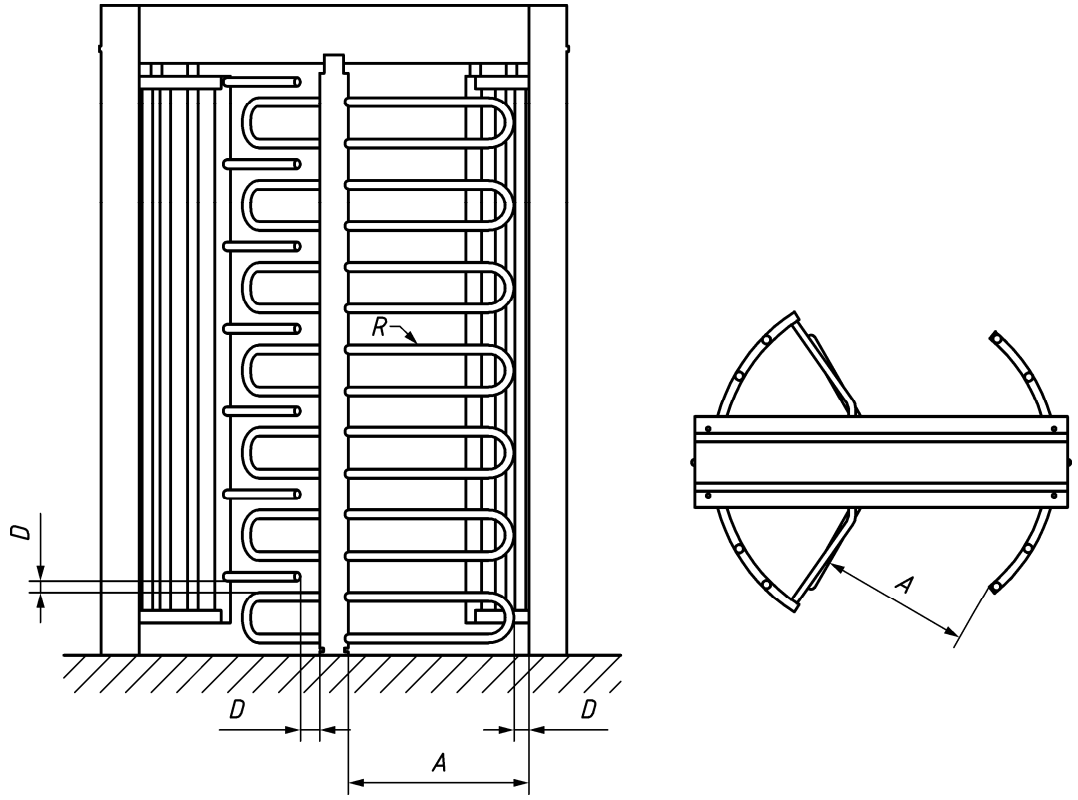

Key

Letter	Measure mm
A	≥ 500
D	≥ 50
R	≥ 10

Figure 3 — Full height vertically rotating turnstile

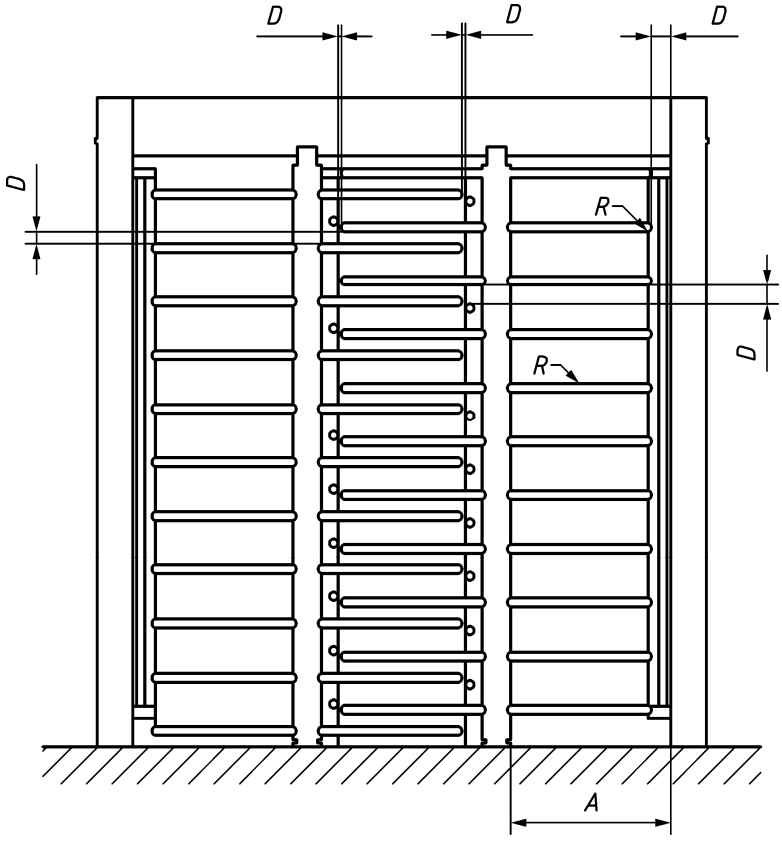

Key

Letter	Measure mm
A	≥ 500
D	≥ 50
R	≥ 10

Figure 4 — Full height vertically rotating turnstile (single bar)

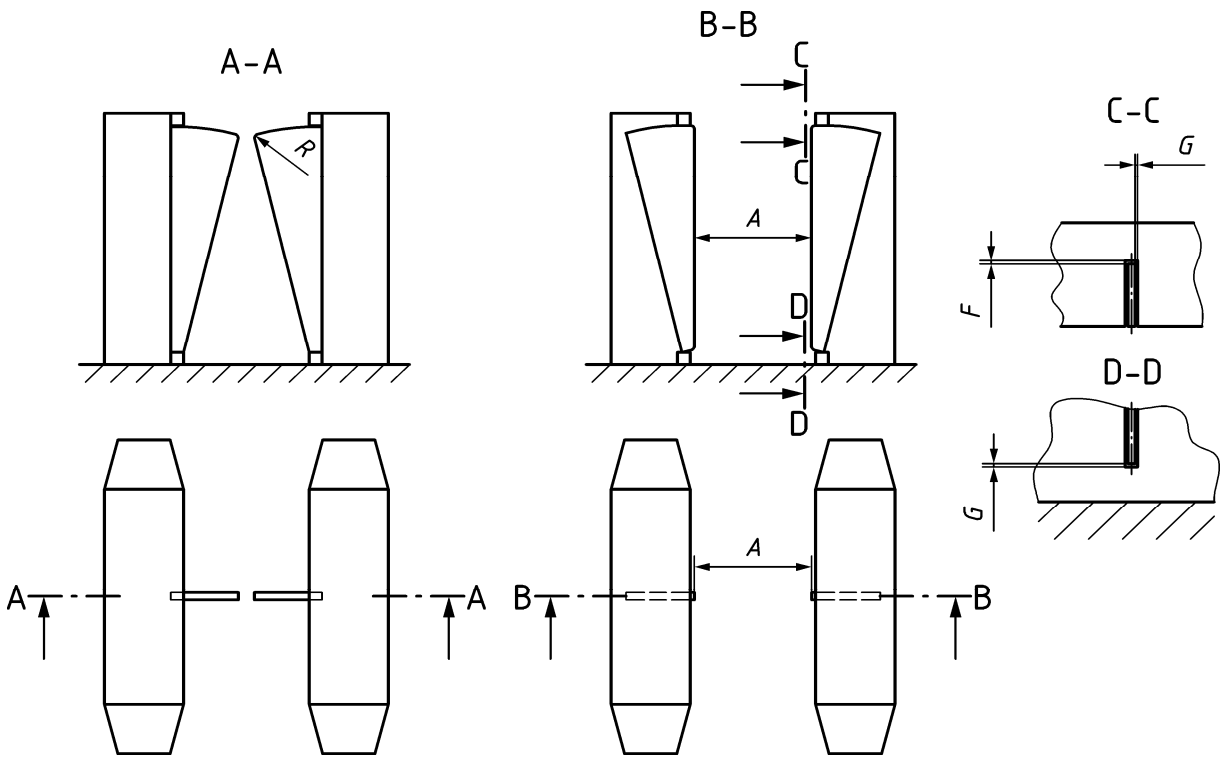

Key

Letter	Measure mm
A	≥ 500
R	≥ 10 or protected
G	≤ 8
F	≤ 8 or ≥ 25

Figure 5 — Retractable lane (pivoting on one point)

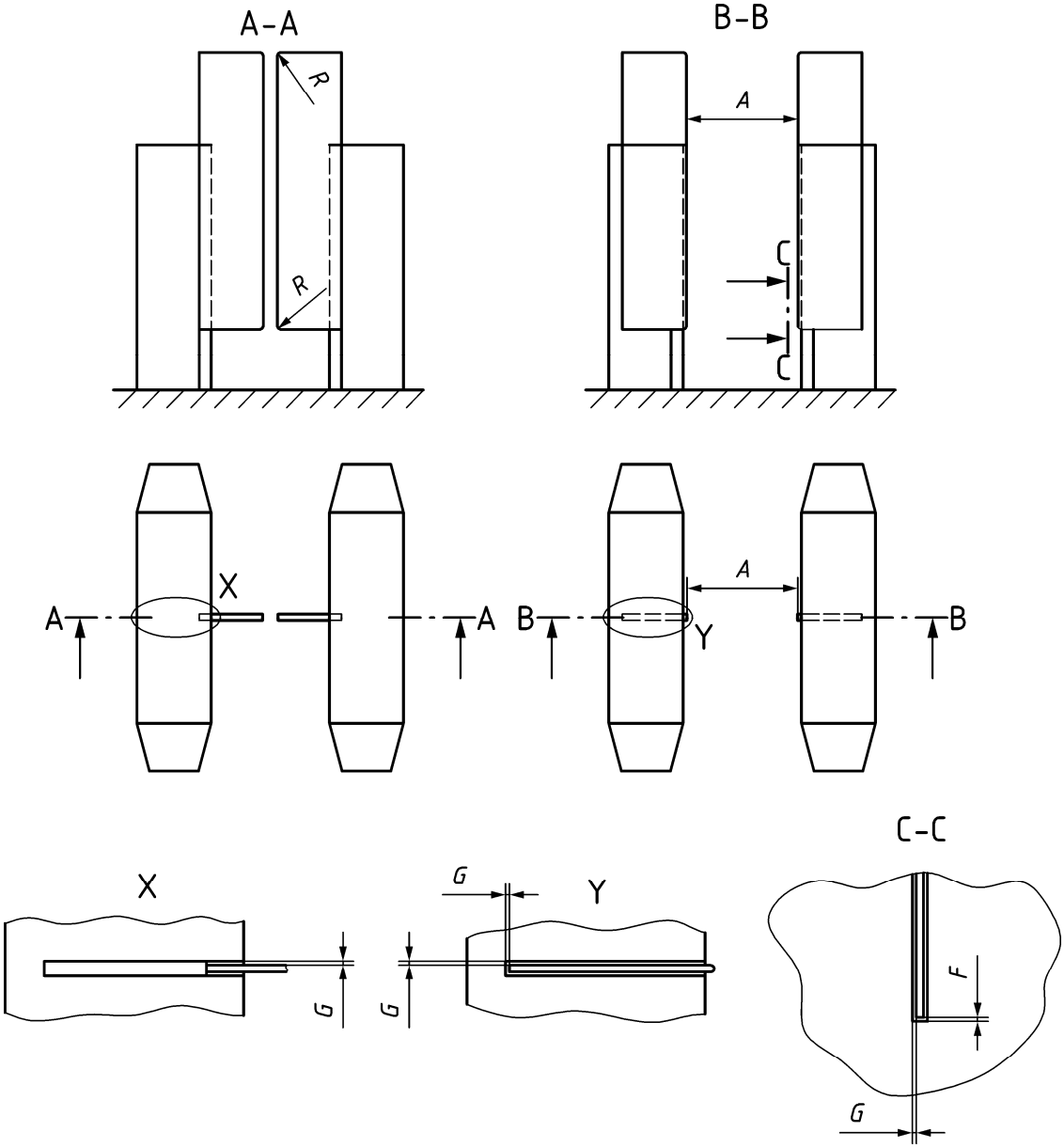

Key

Letter	Measure mm
A	≥ 500
R	≥ 10 or protected
G	≤ 8
F	≤ 8 or ≥ 25

Figure 6 — Retractable lane (linear)

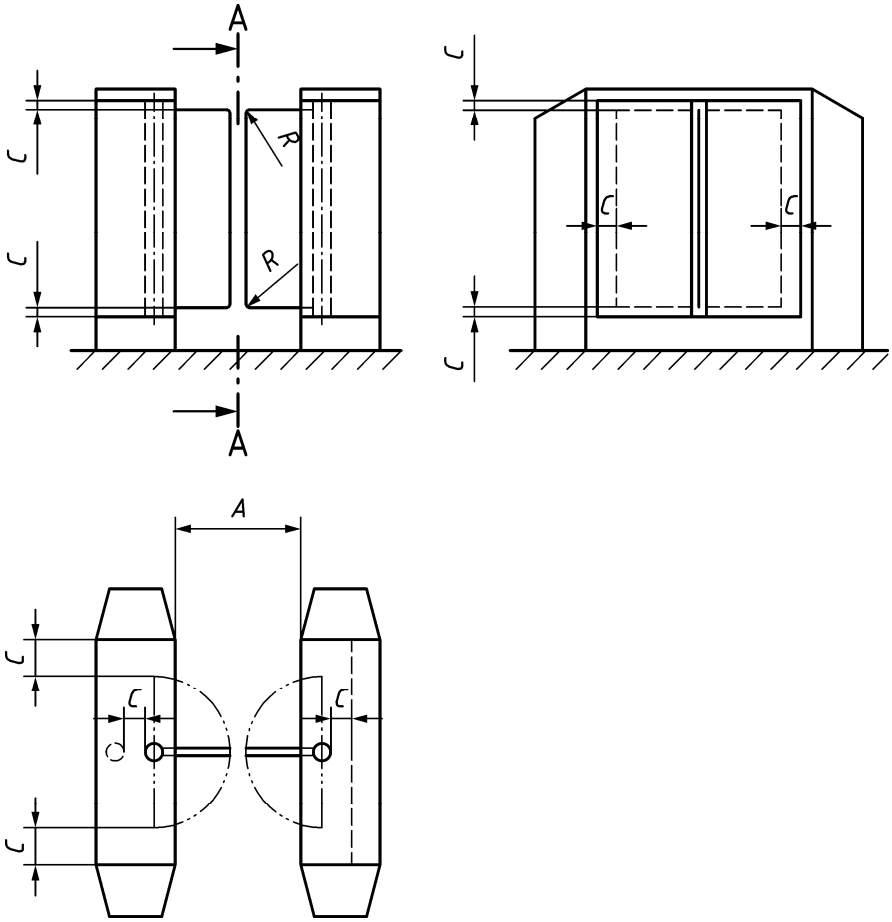

Key

Letter	Measure mm
A	≥ 500
C	≥ 25
R	≥ 10 or protected

Figure 7 — Swing lane

5.2.3 Guards

Guards such as enclosures, covers, enclosing guards, fixed protective leaves (screens), shall be installed taking into account the safety distances to prevent hazard zones being reached by upper and lower limbs as specified in EN ISO 13857:2008, Table 1 and Table 5.

Guards shall be designed and constructed so that:

a) persons cannot reach any danger point up to a height of 2,5 m above floor level;

b) they can only be removed or opened with the aid of a tool;

c) they do not cause additional hazards (e.g. shearing or drawing in).

5.2.4 Low energy mode of operation

The force required to manually prevent a stopped power operated pedestrian entrance control equipment from moving any further - measured at the main closing edge in the direction of travel - shall not exceed 67 N at any point of the movement.

The kinetic energy of power operated pedestrian entrance control equipment shall not exceed 1,69 J.

Full height turnstiles can reach a kinetic energy of 4,0 J under the condition that the minimum radius of the bars and of the accessible parts of the leaf is 10 mm.

In the event of any interruption of power supply or failure of the drive,

— either the equipment is stopped in closed position in one or both directions

or

— it shall be possible to operate the leaf/leaves of the power operated pedestrian entrance control equipment with a manual force not exceeding 67 N and 90 N to start the movement, when the force is applied to the main closing edge in the direction of the movement.

Low energy movement of the power operated pedestrian entrance control equipment is generally not protected with additional protective measures against impact because the kinetic energy levels are considered to be safe.

The energy may be calculated using the following formula:

— Rotating equipment

$$E_{kin} = \frac{1}{2} J \cdot \omega^2$$

where

E_{kin} kinetic energy in Joule;

J momentum of inertia of the moving member(s) in kg·m²;

ω angular velocity of the leaf in rad/s.

NOTE Informative Annex G shows a possible way to calculate J.

— Linear moving equipment

$$E = \frac{1}{2} m \cdot v^2$$

where

E energy in Joule;

m mass of the leaf in kg;

v velocity of the leaf in m/s.

5.2.5 Electro-Sensitive Protective Equipment (ESPE)

When contact is avoided by using ESPE, these devices shall fulfil the following requirements:

— the hazardous leaf movement is stopped as long as the sensing element is actuated, or until the direction of movement of the equipment

— leaf is reversed, or the power operated pedestrian entrance control equipment goes to the low energy mode of operation;

— the adjustment can only be done by using a tool;

— protective equipment shall fulfil EN 12978:2003+A1:2009;

— they shall be assessed by using the test reference test body described in Annex B.

ESPE that monitor environmental changes (e.g. reflecting the light coming back from the ground) shall not adjust to these changes within less than 30 s.

Protective equipment which is exposed to outdoor conditions shall be at least IP44 according to EN 60529:1991, EN 60529/A1:2000 and EN 60529/A2:2013.

5.3 Impact and trapping

If hazards listed in 4.3 exist they shall be safeguarded.

This shall be achieved by:

— protecting the hazardous area of the movement with Electro-Sensitive Protective Equipment (ESPE) in accordance with 5.2.5; or

— limiting the forces generated by the leaf when meeting a person or an obstacle in accordance with Annex C and reversing the movement in such a way to free the person or the obstacle; or

— detecting the obstacle and within three seconds releasing the drive in such a way the power operated pedestrian entrance control equipment can be manually moved with an effort not exceeding the values defined in 5.6; or

— a low energy mode of operation in accordance with 5.2.4.

5.4 Source of energy and power controls

If hazards listed in 4.4 exist they shall be safeguarded.

Electrical drive units in compliance with the relevant requirements of EN 60335-2-103:2015 for electrical safety are considered to safeguard the hazards listed in 4.4 a), b) and d).

Hydraulic drive units in compliance with the requirements of EN ISO 4413:2010 are considered to safeguard the hazards listed in 4.4 c) and d).

Pneumatic drive units in compliance with the requirements of EN ISO 4414:2010 are considered to safeguard the hazards listed in 4.4 c) and d).

Power operated pedestrian entrance control equipment may restart automatically after unintended power supply interruption (hazard 4.4, e) provided that all safety functions are in place and operational.

Means shall be provided to ensure all-pole disconnection from the supply mains. Such means shall be one of the following:

— a supply cord fitted with a plug;

— a switch directly connected to the supply terminals and shall have a contact separation in all poles, providing full disconnection under overvoltage category III conditions according to EN 60664-1:2007.

Electrical equipment and components exposed to outdoor conditions shall be at least IP44 according to EN 60529:1991, EN 60529/A1:2000 and EN 60529/A2:2013.

5.5 Inadequate functional safety

Safety related parts of the control system shall comply with EN ISO 13849-1:2015, Performance Level "c", category 2. The safety function shall at least be checked before or at the end of the movement of the power operated pedestrian entrance control equipment.

Detection of a fault shall cause the power operated pedestrian entrance control equipment to go to a safe state (e.g. low energy mode of operation, opening of the leaf, stop of the leaf) unless the power operated pedestrian entrance control equipment is inherently safe (e.g. in any fault condition low energy or force limitation cannot be exceeded).

The SRP/CS, as far as used in the product, are:

— control of the motor speed;

— control of force limitation;

— operation and monitoring of the safety sensors.

When the power operated pedestrian entrance control equipment is manually operated speed and/or force is/are not considered as part of the SRP/CS.

5.6 Manual operation

Manual operation, if provided, can occur when:

— power is off, or

— power is on but the power operated pedestrian entrance control equipment is released.

The maximum allowed physical effort to manually operate a power operated pedestrian entrance control equipment shall be according to 5.2.4 for low energy mode of operation equipment or ≤ 150 N for all other equipment when the force is applied to the main edge in the direction of the movement

When manual operation is foreseen, if power operation occurs during the manual operation of the power operated pedestrian entrance control equipment:

— either the equipment moves in low energy mode in accordance with 5.2.4;

— or the equipment continues to move in manual operation until the next end position is reached or the manual movement stops. Power operation may restart the equipment provided that all safety functions are in place and operational.

Additionally for full-height and half-height turnstiles it shall be checked that during manual operation, the possible speed of the power operated pedestrian entrance control equipment is limited according to Figure 8 when tested according to 6.6.

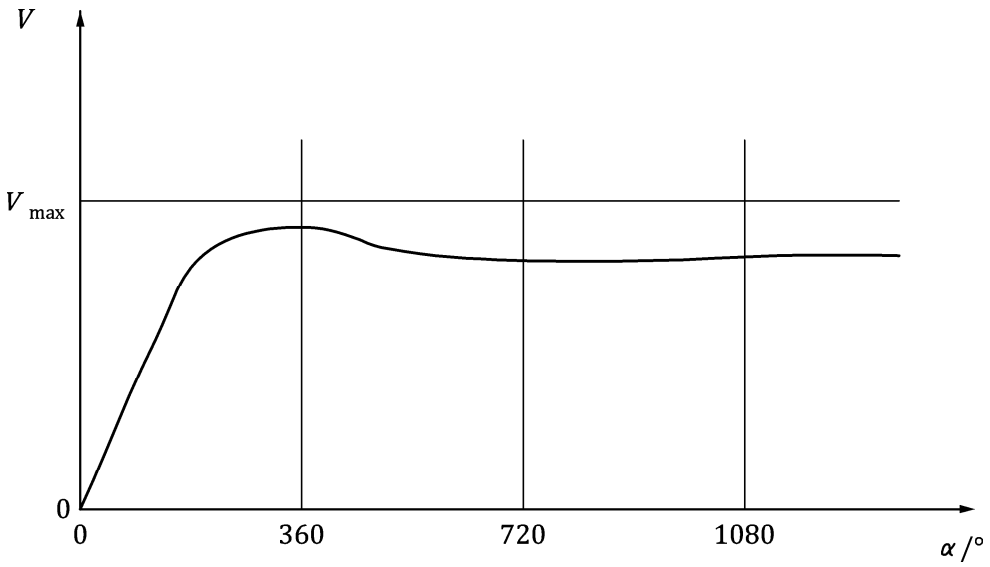

Key

V speed

V_{max} maximum speed corresponding to 4,0 J

$\alpha/°$ 3 rotations starting from application of the test force

Figure 8 — Speed versus rotations

5.7 Loss of stability

Hazards listed in 4.7 shall be avoided by design and construction.

Installation instructions according to 7.1 shall give information about fixing means to be used for attachment to the building.

A force of 1 000 N shall be applied progressively from 0 N to 1 000 N within 20 s and then remain applied for 60 s to the cabinet frame.

The force shall be applied

— at a point as far external as possible to the cabinet frame;

— at a point as far close as possible to the leaf.

The force shall be applied at a height of 1 200 mm, or at the maximum height of the product if lower than 1 200 mm.

The force shall be applied through a testing head of 80 mm diameter.

After the test the power operated pedestrian entrance control equipment, including base plates and/or flanges, shall not show mechanical damages impairing the overall safety of the equipment and the power operated pedestrian entrance control equipment shall operate as in normal use or shall stop operating.

In the locked position single elements shall resist without damages or permanent deformation impairing the safety to 800 N for 60 s applied horizontally in the direction of the passage and vertically in both cases to the end of the element:

— at a height between 1 000 mm and 1 500 mm from the ground for full height turnstiles;

— at a height between 500 mm and 1 000 mm from the ground for half height turnstiles and turnstiles rotating in an angle.

For retractable lanes and swing lanes:

— the horizontal force is applied through a testing head of 80mm diameter at the end of the leaf at the middle of the leaf height;

— the vertical force is applied at the end of the leaf at the top of the leaf height.

For all the types of power operated pedestrian entrance control equipment, the horizontal test is not applicable when the equipment is provided with a break out function.

5.8 Glazing material

Hazards listed in 4.8 shall be avoided as follows:

— Toughened glass in accordance with EN 12150-2:2004 and laminated glass in accordance with EN 14449:2005 are suitable glazing materials. Plain float glass (silica-based glass) and wired glass are not suitable for this application due to the risk of serious injury upon breaking.

— Edges are considered not to be sharp if grinded with a minimum 1 mm radius or with a chamfer with a minimum of 0,2 mm × 0,2 mm.

— Transparent leaf surfaces shall be clearly recognizable or they shall be identified by e.g. permanent marking, suitable labels or by using coloured materials.

5.9 Modification of settings

Hazards listed in 4.9 shall be avoided so that adjustments that could affect safety related characteristics of the equipment shall only be possible with the use of a tool or a code.

5.10 Imprisonment

Hazards listed in 4.10 shall be avoided as follows:

— either giving the user the possibility to manually open at least in one direction the power operated pedestrian entrance control equipment with a physical effort according to 5.6,

— or detecting the presence of the person in the potential imprisonment area and activate the operation of the power operated pedestrian entrance control equipment at least in one direction,

— or providing an opening device available to the user in the potential imprisonment area

— or providing the possibility that the power operated pedestrian entrance control equipment can be released by authorized personnel.

5.11 Shape of the equipment

Hazards listed in 4.11 shall be as follows:

— Accessible edges shall be burr-free and rounded with a minimum radius of 1 mm or a chamfer with a minimum of 0,2 mm × 0,2 mm.

— Accessible corners of leaves of retractable lanes and swing lanes shall either be rounded with a radius of ≥ 10 mm (see Figures 5, 6 and 7) or shall be protected with flexible material (e.g. foam or rubbers) .

— Surfaces shall be smooth and burr-free.

5.12 Use in escape routes and emergency exits

Power operated pedestrian entrance control equipment to be used in escape routes and emergency exits shall fulfil the requirements of Annex A.

6 Verification of the safety requirements and/or protective/risk reduction measures

6.1 General

Unless otherwise specified, tests shall be carried out in the worst conditions and configuration specified by the manufacturer.

Tests are carried out on a single test specimen.

Testing may also be carried out on a separate test specimen or sub-assembly/part of it if a test is destructive and equivalent results can be achieved by testing individual sub-assemblies/parts of the equipment.

Safety of electrical sub-assembly/part of the equipment is also checked in single fault condition(s). Those tests need not be repeated if that sub-assembly or part has already been tested for the relevant single fault condition(s) and if the incorporation into the power operated pedestrian entrance control equipment does not change the performance of the sub-assembly or part.

Unless otherwise specified, tests are performed at an ambient temperature between 15 °C and 30 °C and a relative humidity between 30 % and 70 %.

The following measuring accuracy applies:

— temperature measurements: ± 3 °C;

— force measurements: ± 10 %;

— electrical quantities: ± 3 %;

— time measurements: ± 5 %;

— length measurements: ± 5 %.

6.2 Crushing, shearing and drawing-in

6.2.1 General

Test methods to verify the requirements set in 5.2 are the following:

— safety distances in accordance with 6.2.2;

— guards such as enclosures, covers, enclosing guards, fixed protection leaves in accordance with 6.2.3;

— low energy mode of operation in accordance with 6.2.4;

— Electro-Sensitive Protective Equipment (ESPE) in accordance with 6.2.5.

6.2.2 Safety distances

Safety distances are checked by measurement and by inspection of the instructions.

6.2.3 Guards

Guards are checked by inspection and, where necessary to check safety distances, by measurement.

6.2.4 Low energy mode of operation

Low energy mode of operation is checked by measurement.

The kinetic energy is calculated based on velocity measurement according to the relevant formula shown in 5.2.4.

The minimum radius of accessible parts of turnstiles leaf is measured by appropriate instrument.

6.2.5 Electro-Sensitive Protective Equipment (ESPE)

Requirements set in 5.2.5 are checked by measurement according to Annex B and by inspection of the accompanying documentation.

IP degree of protection is checked by inspection of the accompanying documentation or by measurement.

6.3 Impact and trapping

ESPE is checked according to 6.2.5.

Limitation of forces is checked according to Annex C. Reversing of the movement is checked by visual inspection.

Releasing of the drive and manual effort needed to move the equipment is checked by measurement.

Low energy mode of operation is checked according to 6.2.4.

6.4 Source of energy and power controls

Requirements set in 5.4 are checked by inspection and measurement.

6.5 Functional safety

Compliance of safety related parts of the control system are assessed against EN ISO 13849-1:2015.

6.6 Manual operation

When manual operation is foreseen, requirements set in 5.6 are checked by inspection and measurement.

It is checked by measurement that the forces required to move the leaf from the closed and from the middle way positions are according to 5.6.

If power operation occurs during the manual operation of the power operated pedestrian entrance control equipment it is checked by inspection that the equipment continues to move in manual operation until the next end position is reached or the manual movement stops.

If power operation restarts, it is checked by inspection that all safety functions are in place and operational.

Additionally for half-height and full-height turnstiles it is checked by measurement that, when operated with a force of 200 N applied continuously to the main closing edge, the possible speed of the manual operated equipment does not exceed the limits specified in Figure 8.

6.7 Loss of stability

Requirements set in 5.7 are checked by measurement and by inspection of the instructions.

Stability of the cabinet frame is tested applying the force according to Annex D.

Equipment technical documentation/declarations or calculations are checked to verify that the relevant minimum safety factors have been taken into consideration during the design of the roof of power operated pedestrian entrance control equipment provided with a roof. If no technical documentation/declaration or calculation are available the safety factors are checked carrying out the relevant tests on the sub-assembly/parts of the equipment.

6.8 Glazing material

Documentation is checked to verify that glazing fulfils the requirements of 5.8.

It is verified by visual check that transparent leaf surfaces are clearly recognizable.

6.9 Modification of settings

It is checked by testing that the requirements of 5.9 are fulfilled.

6.10 Imprisonment

It is checked by inspection or testing that the requirements of 5.10 are fulfilled.

6.11 Shape of the equipment

It is checked by inspection or measurement that the requirements of 5.11 are fulfilled.

7 Information for use

7.1 General

Information for use shall be provided in accordance with EN ISO 12100:2010, 6.4.

7.2 Instruction handbook

The manufacturer shall made available with the power operated pedestrian entrance control equipment an instruction handbook in accordance with the principles of EN ISO 12100:2010, 6.4.5.

The information shall contain the following:

— trade mark or identification mark. Business name and postal address or postal code of the manufacturer and, where applicable, his authorized representative;

— model or type reference of the power operated pedestrian entrance control equipment as marked on the system itself, except for the serial number;

— the designation of the power operated pedestrian entrance control equipment together with its explanation in case it is given by a combination of letters and/or numbers;

— information relating to storage conditions;

— dimensions and mass of the power operated pedestrian entrance control equipment and instructions for handling;

— where appropriate, information relating to installation of the power operated pedestrian entrance control equipment, including, when needed, instructions for commissioning;

— where appropriate, that a disconnection means, incorporated in the fixed wiring, to ensure all-pole disconnection from the supply mains is to be provided;

— where and how to correctly install electro-sensitive protective equipment in order to prevent it from being damaged or rendered inoperative during any foreseeable operating conditions;

— information relating to the intended use of the power operated pedestrian entrance control equipment;

— maintenance instructions;

— user instructions;

— range of intended environmental conditions.

The specific instructions related to the safe operation of the power operated pedestrian entrance control equipment shall be collated together in the front section of the instruction handbook. The height of the characters, measured on the capital letters, shall be at least 3 mm.

If the power operated pedestrian entrance control equipment does not require maintenance this shall be clearly stated in the instruction handbook. Otherwise the instruction handbook shall contain the substance of the following:

— "Warning! Lack of maintenance can lead to unsafe operation."

— instruction related to cleaning;

— the nature and frequency of inspections necessary for safety;

— specification of the spare parts to be used when these can affect the health and safety of users;

— instructions relating to maintenance operations which require a definite technical knowledge or particular skills and hence need to be carried out exclusively by competent person;

— instructions relating to maintenance actions which do not require specific skills;

— information about the wearing parts of the equipment, their discard criteria, the required maintenance and maintenance interval;

— information relating to dismantling, disabling and scrapping.

The maintenance instructions shall inform the power operated pedestrian entrance control equipment owner about the importance of recording any maintenance operation. An example of content of a logbook can be found in Annex E.

The instruction handbook shall contain the substance of the following warnings:

— "Prevent children playing with the power operated pedestrian entrance control equipment";

— "This power operated pedestrian entrance control equipment is not intended for use by persons (including children) with reduced physical, sensory or mental capabilities, or lack of experience and knowledge, unless they have been given supervision or instruction concerning use of the equipment by a person responsible for their safety";

— "Dashing through a moving power operated pedestrian entrance control equipment can lead to serious injuries".

When the power operated pedestrian entrance control equipment is provided with pneumatic drive units, the instruction handbook shall additionally include:

— a prominent warning shall be given in the instructions of the hazard from uncontrolled movement due to stored energy;

— how stored energy can be safely released;

— means for releasing stored energy shall be suitable labelled.

The instruction handbook shall also include the following, as far as applicable:

— operating conditions of the power operated pedestrian entrance control equipment, e.g. max. operating hours per day, automatic/manual operation, indication of the operating mode(s);

— explanation of the warning sign, if any;

— information about the safe use of manual emergency and/or manual release;

Information for power operated pedestrian entrance control equipment shall additionally state that the A-weighted emission sound pressure level of the door is equal to or less than 70 dB(A), e.g. by writing LpA ≤ 70 dB(A).

7.3 Marking

The marking of the power operated pedestrian entrance control equipment shall be visible, legible and indelible and shall include the following:

— the business name and full address of the manufacturer and, where applicable, his authorized representative;

— designation of the power operated pedestrian entrance control equipment;

— designation of series or type;

— serial number, if any;

— the year of construction, that is the year in which the manufacturing process was completed.

— mandatory marking.

NOTE For machines and their related products intended to be placed on the market in the EEA, the mandatory marking is the CE marking as defined in the applicable European directive(s), e.g Machinery.

Annex A
(normative)

Power operated pedestrian entrance control equipment to be used in escape routes and emergency exits

A.1 General

Annex A provides additional requirements for power operated pedestrian entrance control equipment used in escape routes and emergency exits.

In escape routes and emergency exits, only power operated pedestrian entrance control equipment with a break out function are allowed. The break out function shall be available in any position of the leaf/leaves.

NOTE In some countries, additional requirements (e.g. concerning the minimum width of the escape routes) may be specified by national authorities.

A.2 Functional safety

Safety related parts of the control system used for escape route functionality shall comply with Performance Level “d” according to EN ISO 13849-1:2015 with a minimum of category 2.

Any electrical faults preventing normal operation of the equipment shall either be detected automatically or detected after activation of the equipment within 15 s and cause the equipment to automatically open or to release the break out system.

A.3 Electrical power supply

In the event of failure or disconnection of the electrical power supply the locking system for the break out function shall be released at the latest after 5 s when the power supply goes off.

Systems using electrical energy for opening the escape route shall have a redundant energy power supply to guarantee opening in case of power failure. They shall have a monitoring system checking that the energy level stored is enough for at least one opening. This check shall be carried out immediately after connection to the power supply and subsequently at least once every 24 h. If the check fails or is not performed, the leaf shall automatically open and remain open. If the operating mode selector is in the security-locked position, the leaf does not need to open if the requirements of A.7 are satisfied.

A.4 Break out function

The total force required to release the break out function shall not exceed 220 N. The force shall be measured in a static way at the leading edge at right angles to the main closing edge of the leaf at a height of 1 000 mm ± 10 mm or at the top of the leaf if it is less than 1 000 mm height.

The force required to further move the power operated pedestrian entrance control equipment shall not exceed 67 N when measured in a static way at the leading edge at right angles to the leaf at a height of 1 000 mm ± 10 mm or at the top of the leaf if it is less than 1 000 mm height.

After the break-out function is triggered the leaf/leaves may afterwards go back in the original position either automatically or manually.

The break out function shall be tested for (500 ± 10) times after 10 000 cycles of the cycle test according to A.8. Upon completion of the cycle test according to A.8, they shall be subjected to a further 100 times test.

The break-out function may be equipped with a locking system. In this case the locking system shall meet the requirements of A.5 and A.6.

A.5 Locking systems for the break out function

The break-out function may be security-locked (to prevent unauthorised entry) if the following requirements are fulfilled. Locking systems for the break out function shall be able to release the break out function within 1s after receiving the signal.

Locking systems for the break out function shall be also able to release the break out function under a preload of 90 % of the maximum locking force of the device in opening direction but not more than 1 000 N.

If the locking system for the break out function is designed to include time delay, the time delay function shall fulfill the relevant requirements of EN 13637:2015.

National requirements concerning the time delay function shall be considered.

A.6 Device to release the electric locking mechanism of the break-out function

The release of the break-out function shall be triggered by a release button (initiation element) according to EN 13637:2015.

An additional triggering by an external signal (e.g. fire alarm system, building services control system, etc.) is possible.

The initiating element shall be installed at a height between 600 mm and 1 200 mm from the finished floor level, in escape direction (see Figure A.1).

When not directly on the equipment the installation instructions shall specify that the initiating element shall be installed at a maximum distance of 600 mm from the power operated pedestrian entrance control equipment (see Figure A.1).

The installation instructions shall also specify that in case of multiple escape routes or emergency exits installed one next to each other at least one initiating element shall be reachable from each power operated pedestrian entrance control equipment.

Dimensions in millimetres

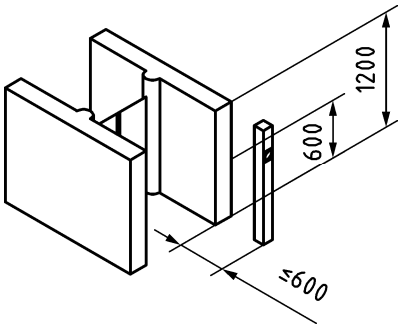

Figure A.1 — Position of initiating elements

A.7 Operating mode selection

When an operating mode selector is used, the mode of operation shall be clearly identified and marked on the operating mode selector.

If a “security-locked” mode of operation is available, where the escape route functionality is deactivated, the mode of operation shall be protected, e.g. by an access code or a key, so that changes can only be made by authorized personnel.

A.8 Durability

Power operated pedestrian entrance control equipment for use in escape routes and emergency exits shall be suitable for at least 1,0 million continuous operating cycles.

After the durability test the power operated pedestrian entrance control systems shall be fully functional and safe.

Annex B
(normative)

Reference test body

This annex is applicable to ESPE. ESPE shall always be tested on a complete power operated pedestrian entrance control equipment.

The BA reference test body (see Figure B.1) is a box with the dimensions 700 mm × 300 mm × 200 mm. Both the top side and two sides that meet are made of a material with a diffuse reflectance value in the range of 2 % to 5 % of the wavelength of the ESPE transmitter (e.g. IC antistatic foam; see also CLC/TS 61496-3:2008, Figure 2 for further materials). The bottom side and the other two sides are made of a material with a diffuse reflectance value in the range of 80 % to 90 % of the wavelength of the ESPE transmitter (e.g. white paper).

The tests for presence detection devices are carried out according to figures B.2 to B.6. It shall be checked that the reference test body BA is detected in the whole swept area of the leaf/leaves. The reference test body BA shall be detected and the power operated pedestrian entrance control equipment shall either stop before it touches the reference test body, or reverse or switch over to low energy mode of operation as described in the product documentation.

Tests are performed using both reflectance sides of the reference test body BA.

For vertically rotating turnstiles one additional test is performed using the BB reference test body.

The BB reference test body is placed on the ground in the middle of the moving leaf as shown in the Figures B.2 and B.3. The reference test body BB shall be detected and the power operated pedestrian entrance control equipment shall either stop before it touches the reference body, or switch over to low energy mode of operation, or reverse in low energy mode of operation as described in the product documentation.

Dimensions in millimetres

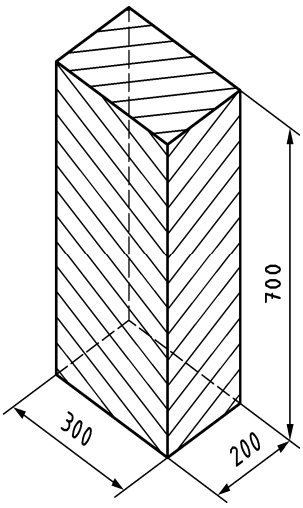

a) Reference test body BA

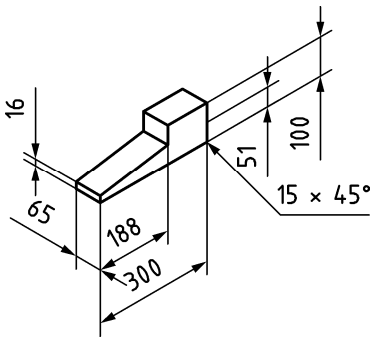

b) Reference test body BB

Key

a) Reference test body BA: diffuse reflectance value in the range of 2 % to 5 % at the wavelength of the transmitter of the ESPE

a) Reference test body BA: diffuse reflectance value in the range of 80 % to 90 % at the wavelength of the transmitter of the ESPE

b) Reference test body BB: diffuse reflectance value in the range of 10 % to 90 % at the wavelength of the transmitter of the ESPE

Figure B.1 — Reference test bodies

Tests for ESPE using the background as a reference shall be performed with a background with a diffuse reflectance value of (20 ± 5) % of the ESPE wavelength (e.g. carpet).

Tests shall be performed positioning the reference test body(ies) as shown in Figure B.2 and B.3.

Dimensions in millimetres

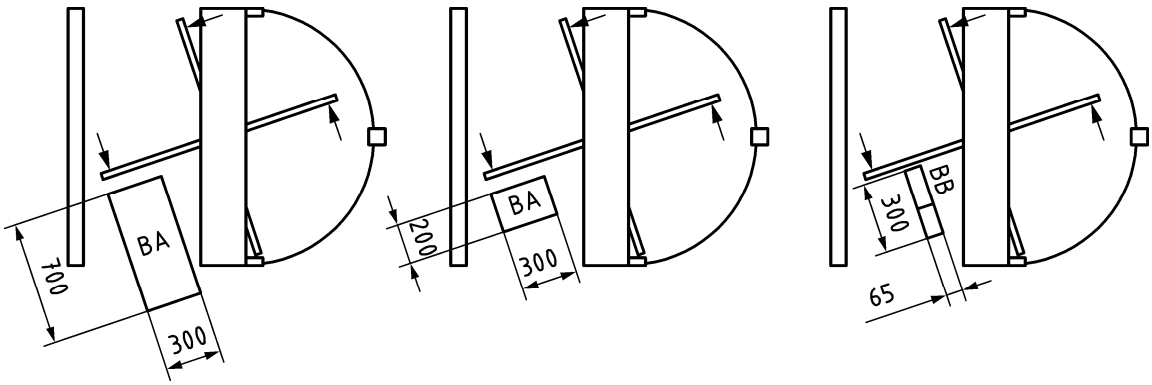

Figure B.2 — Half-height vertically rotating turnstile

Dimensions in millimetres

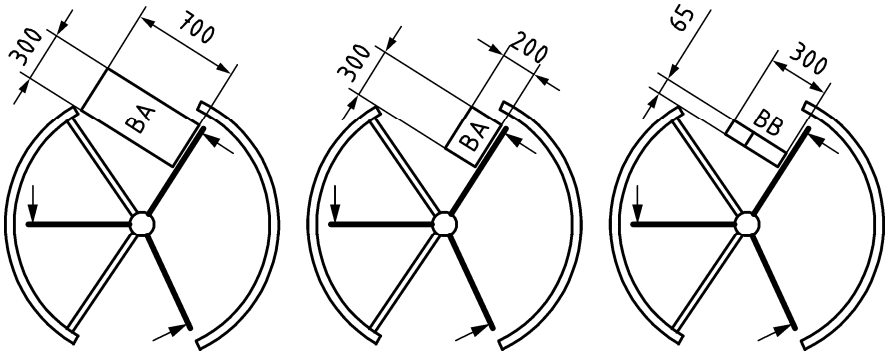

Figure B.3 — Full-height vertically rotating turnstile

Dimensions in millimetres

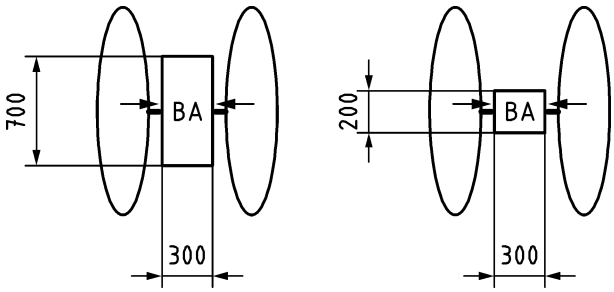

Figure B.4 — Retractable lane

Dimensions in millimetres

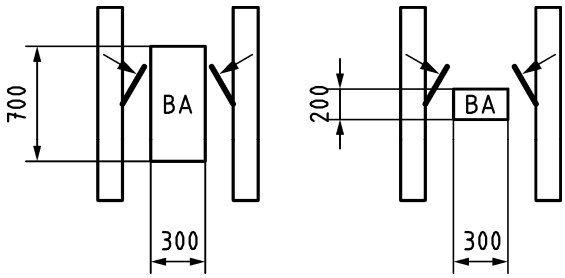

Figure B.5 — Swing lane

Dimensions in millimetres

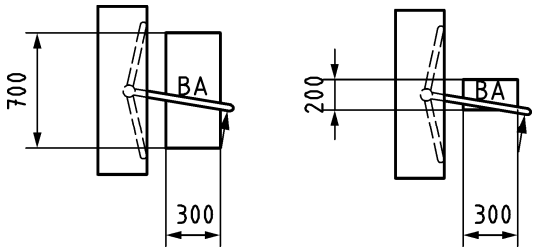

Figure B.6 — Turnstile rotating in an angle

Annex C
(normative)

Limitation of forces

C.1 Permissible dynamic forces

The values of dynamic force generated by the equipment leaf when impacting a person or an obstacle shall be considered to be safe if the limits specified in Table C.1 are not exceeded, when measured according to C.4 with an instrument complying with C.3.

Table C.1 — Permissible dynamic forces

Equipment type	Permissible dynamic forces between closing edges and opposing closing edges [a]	Measuring points
Vertically rotating turnstile (see F.1, Figures F1 – F2)	400 N	See Figures C.2 and C.6
Turnstile rotating in an angle (see F.1, Figure F.3)	400 N	See Figure C.5
Swing lane (see F.2, Figure F.4)	400 N	See Figure C.4
Retractable lane (see F.3, Figure F.5)	400 N	See Figure C.3

[a] The opposing closing edge may also be a second main closing edge or flat areas around the opening equipment.

The leaf force measurements shall not exceed the profile shown in Figure C.1.

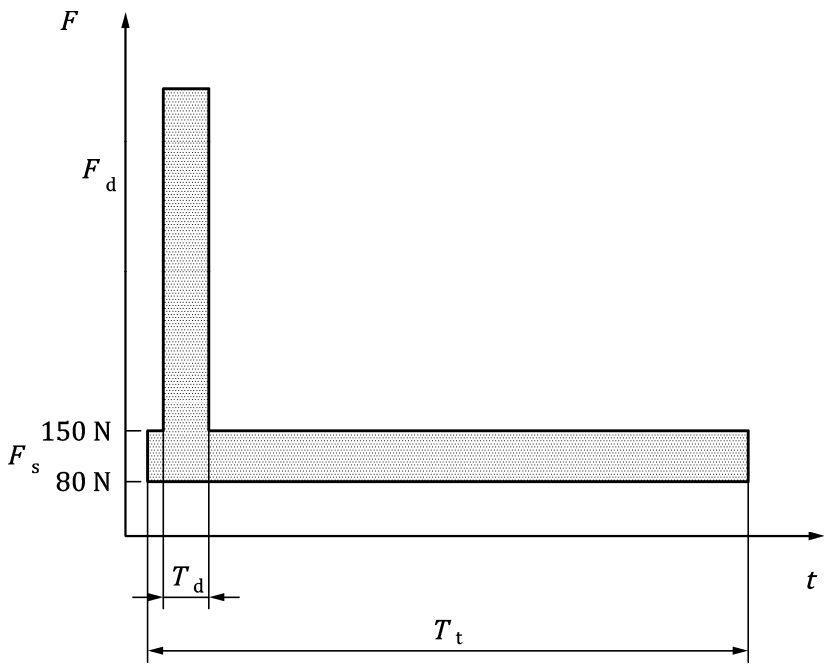

Key

F_d maximum force measured during the dynamic period T_d (dynamic force) – see Table C.1 for permitted values

T_d period of time of maximum 0,75 s starting from the first measured force exceeding 150 N

F_s maximum force measured outside the dynamic period T_d (static force)

T_t period of 3 s starting from the first measured force exceeding 80 N and including T_d

Figure C.1 — Force versus time

C.2 Permissible static forces

After T_d has elapsed, no static force > 150 N is allowed. This static force shall come down to < 80 N after a total time T_t of maximum 3 s.

However, after T_d, peaks exceeding 150 N but lower than the admissible dynamic forces shown in Table C.1 are accepted if:

a) they are decreasing from one to the other;

b) the period of oscillation is ≤ 1 s;

c) the average force calculated over the period of T_t - T_d is ≤ 150 N.

C.3 Impact force measuring equipment

The test equipment for measuring forces shall consist of the following parts:

a) two contact areas with a diameter of 80 mm. The contact areas shall be made of a hard material with sufficient strength, e.g. steel;

b) spring that gives the contact area a spring ratio of (500 ± 50) N/mm;

c) load cell;

d) time measuring device;

e) measuring value display/measuring value output device.

The measuring equipment shall comply with the following specification:

— rising/falling time of the load cell amplifier < 5 ms;

— the equipment shall be able to give measured values with an accuracy of at least ± 5 % or ± 10 N, whichever is the maximum deviation;

— measurements to be given in graphical form or by displaying the values.

C.4 Impact force measuring points

Impact forces shall be measured at the main closing edge and at the middle of the leaf movement.

Figures C.2 to C.6 show the measuring points of the different types of power operated pedestrian entrance control equipment.

Key

a dynamic force meter

b rigid buffer

f dynamic impact force measuring point

Figure C.2 — Measuring device

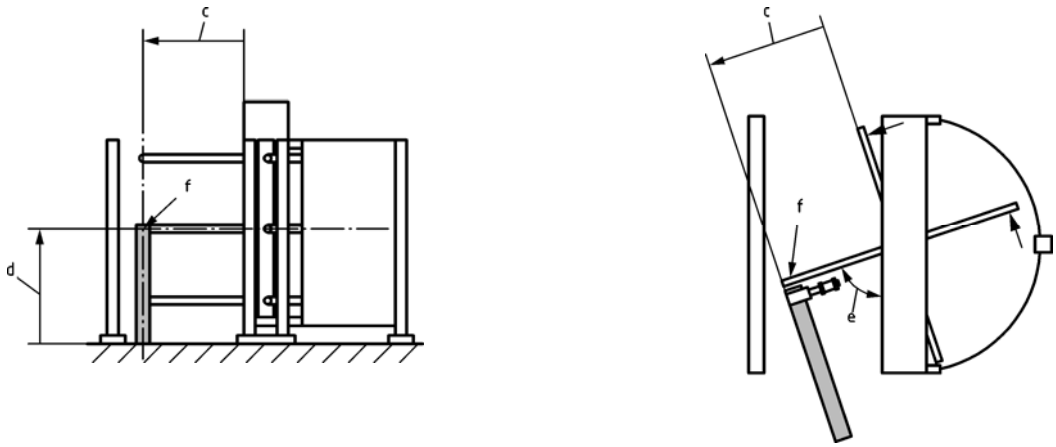

a) Front view **b) Top view**

Key

c	edge of the leaf
d	half of leaf height
e	middle of the leaf movement
f	dynamic impact force measuring point

Figure C.3 — Measuring point of half-height vertically rotating turnstile

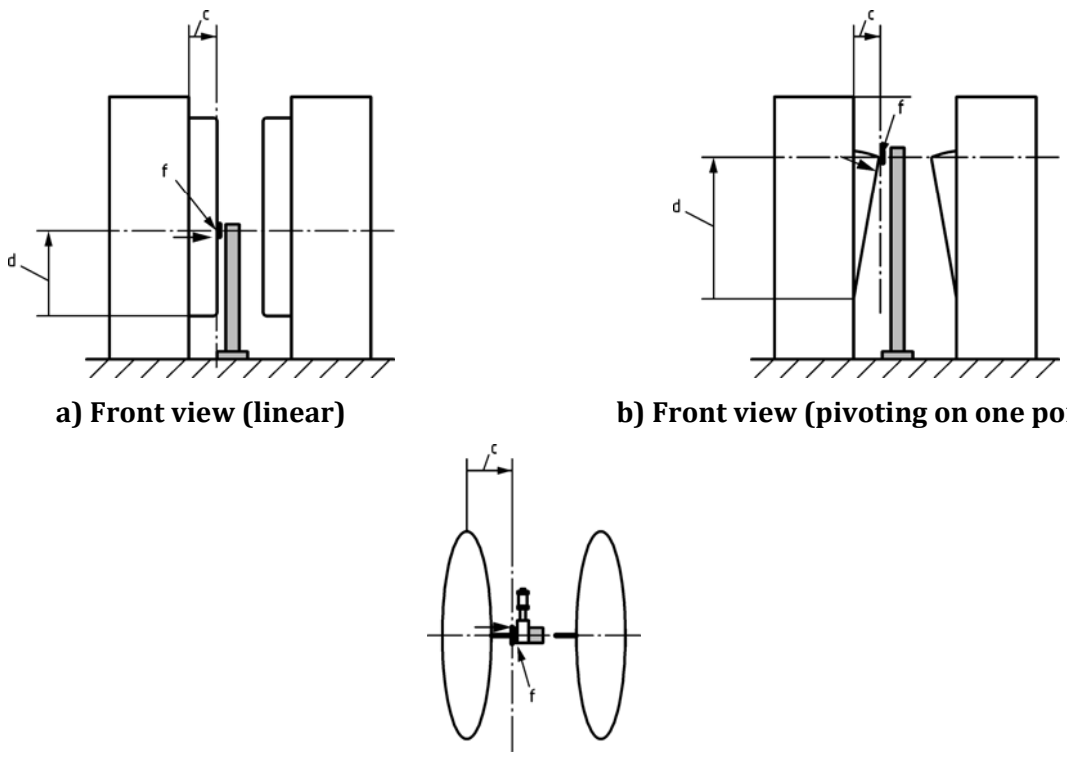

a) Front view (linear) **b) Front view (pivoting on one point)**

c) Top view

Key

c	ddge of the leaf
d	half of leaf height
f	dynamic impact force measuring point

Figure C.4 — Measuring point of retractable lanes

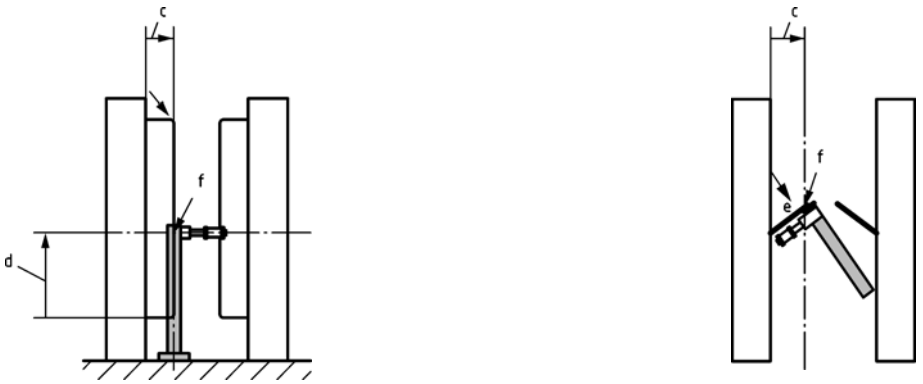

a) Front view **b) Top view**

Key

c edge of the leaf
d half of leaf height
e middle of the leaf movement
f dynamic impact force measuring point

Figure C.5 — Measuring point of swing lane

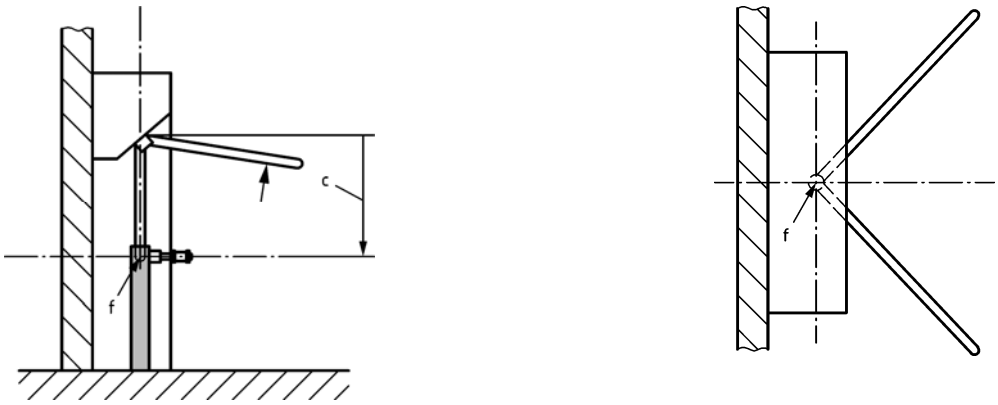

a) Front view **b) Top view**

Key

c edge of the leaf
f dynamic impact force measuring point

Figure C.6 — Measuring point of turnstile rotating in an angle

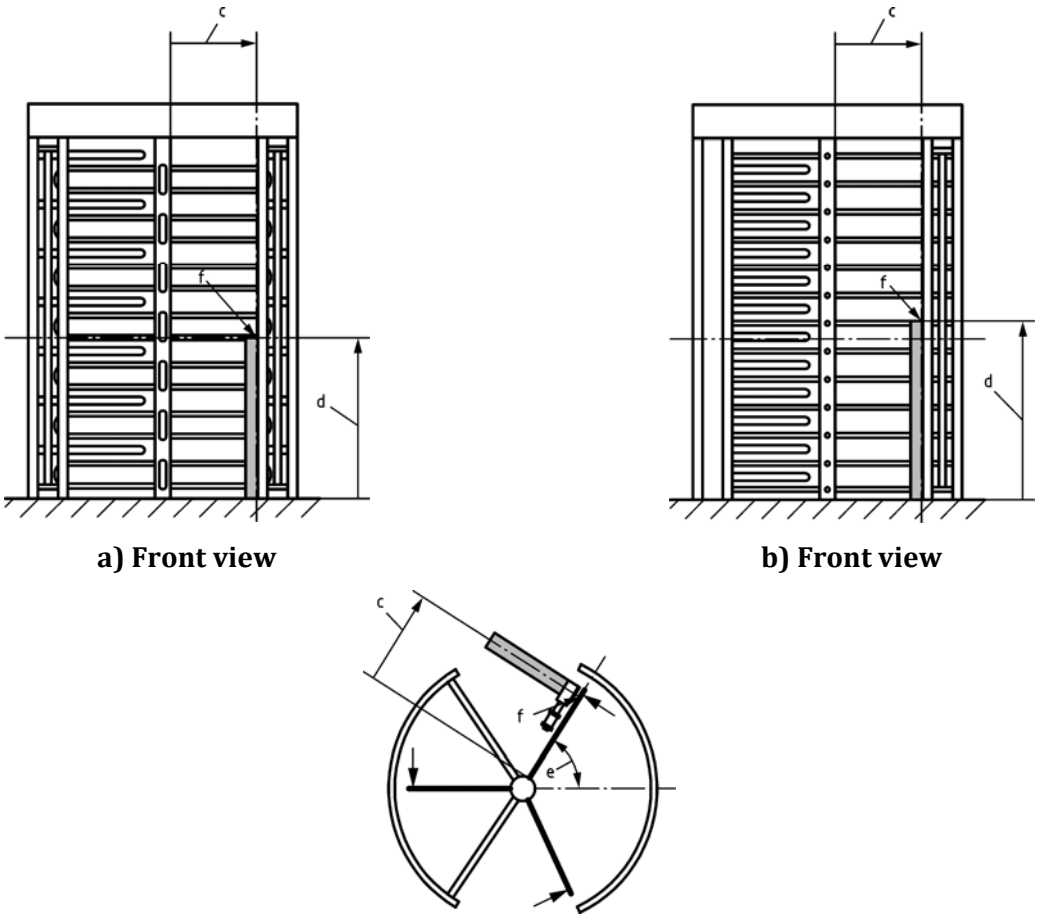

a) Front view **b) Front view**

c) Top view

Key

c	edge of the leaf
d	half of leaf height
e	middle of the leaf movement
f	dynamic impact force measuring point

Figure C.7 — Measuring point of full-height vertically rotating turnstile

Annex D
(normative)

Stability measuring points

The force to verify the stability of the power operated entrance control equipment shall be applied as shown in Figures D.1 to D.5.

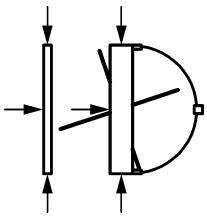

Figure D.1 — Half-height vertically rotating turnstile

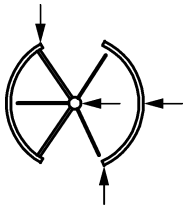

Figure D.2 — Full-height vertically rotating turnstile

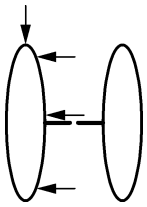

Figure D.3 — Retractable lane

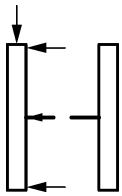

Figure D.4 — Swing lane

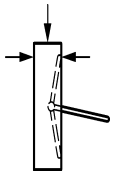

Figure D.5 — Turnstile rotating in an angle

Annex E
(informative)

Log book

At least the following should be included in a log book prior to hand over the document:

— name and contact details of the manufacturer;

— unique identification number which appears on the power operated pedestrian entrance control equipment labelling;

— power operated pedestrian entrance control equipment location reference (when necessary);

— name and contact details of the installation organization, where appropriate;

— date of completion of the installation;

— identification of any power operated drive unit;

— identification of any protective devices including software version if relevant;

— recording of any final verification and/or functional test.

The log book should refer to applicable instruction for use.

The log book should have space available to allow the recording of:

— all maintenance and repairs carried out, including recommendations (e.g. improvements, replacements);

— all significant changes and/or upgrades carried out;

— any checks done;

— name, date and signature of the responsible person.

Annex F
(informative)

Examples of product variations

F.1 Turnstile variations

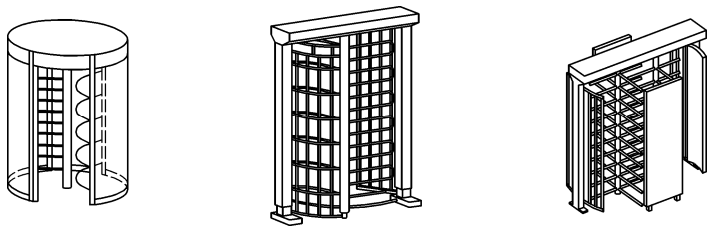

Figure F.1 — Full height turnstile variations

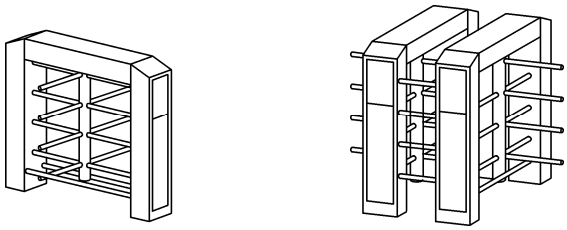

Figure F.2 — Half height turnstile variations

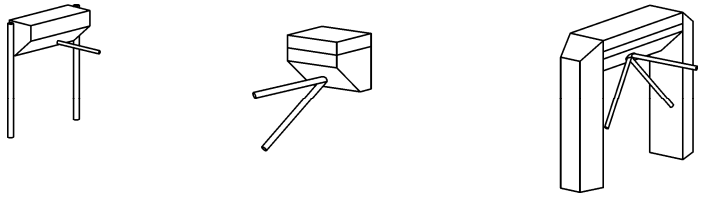

Figure F.3 —Turnstile rotating in an angle variations

F.2Swing lane variations

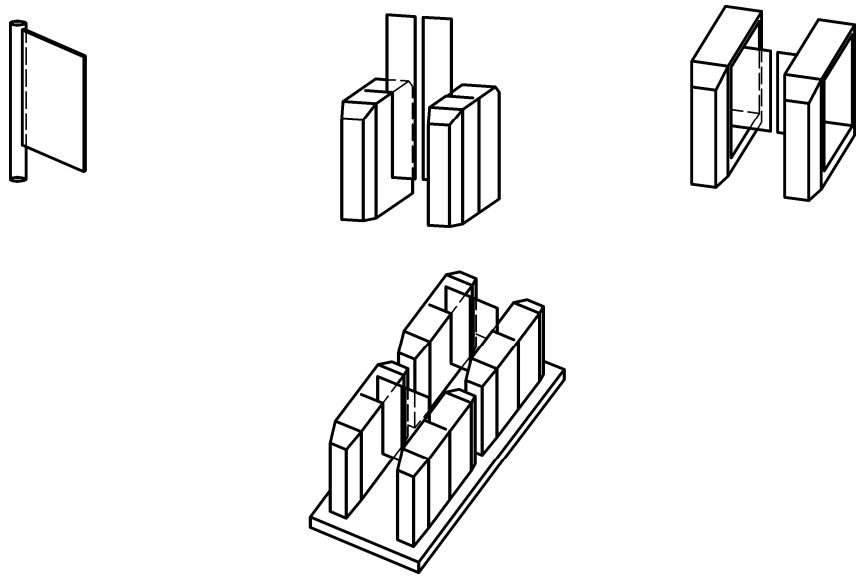

Figure F.4 — Swing lane variations

F.3Retractable lane variations

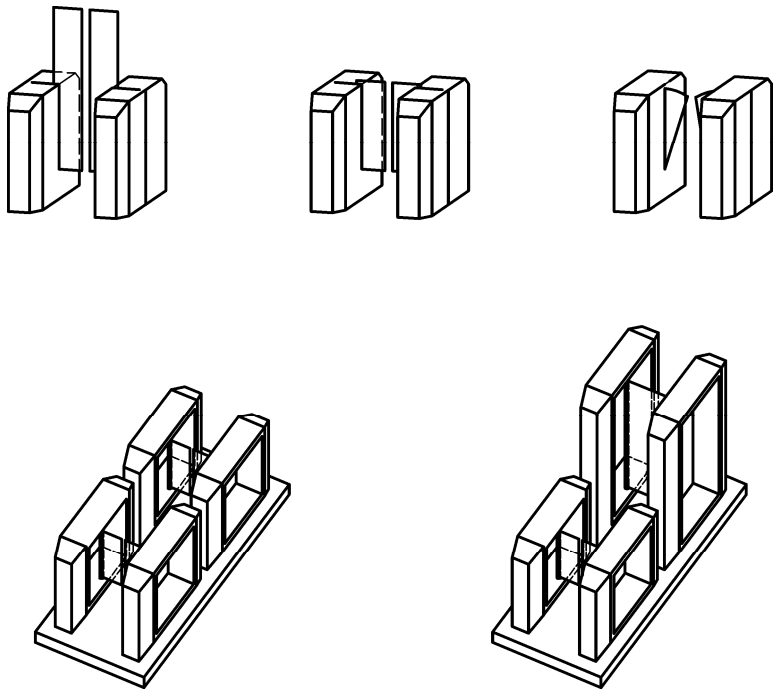

Figure F.5 — Retractable lane variations

Annex G
(informative)

Example of calculation of the Mass Moment of Inertia

This annex shows a method of calculating the mass moment of inertia of a turnstile leaf without having to use certain – often expensive – software. For clarification, a calculation example is given.

The approach described here is valid for any number of arms. In practice, one-, two- and three-arm leaves under an angle ≠ 90°, and four-arm leaves under 90° are used (see Figure G.1).

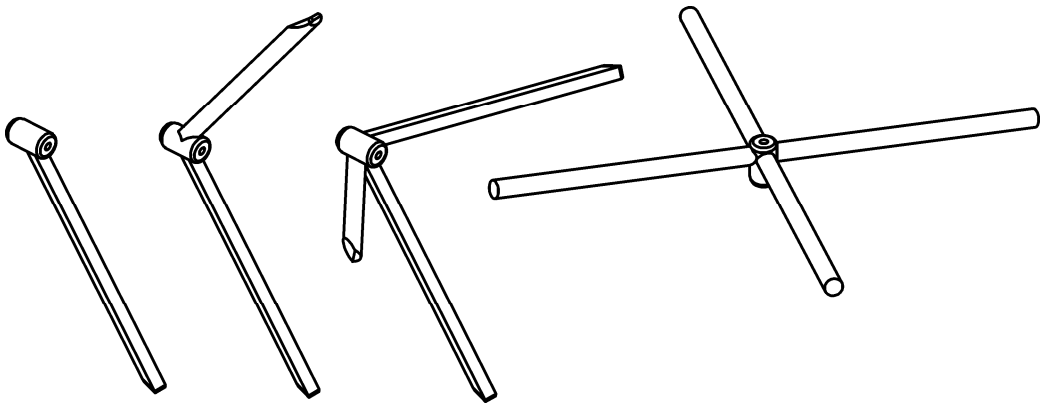

Figure G.1 — Examples for turnstile leaves with different number of arms

The Mass Moment of Inertia of a solid measures the solid's ability to resist changes in rotational speed about a specific axis. The larger the Mass Moment of Inertia, the smaller the angular acceleration about that axis for a given torque (source: efunda.com)

The mass moment of inertia is identified by the letter **J** (alternatively **I** or **Θ**) and has the unit **kg·m²**.

To calculate the mass moment of inertia of a homogeneous rigid body, the mass is assumed to be a mass point located on the half of the radius of the solid.

If the mass and the radius (see Figure G.2) of a mass point are known, the mass moment of inertia of a mass point can easily be calculated by using the following formula:

$$J = m \cdot r^2$$

where

J mass moment of inertia;

m mass;

r radius.

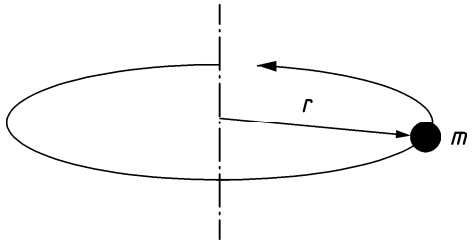

Key

r radius
m mass point

Figure G.2 — Mass point

A leaf usually consists of a massive hub and one or more tubular bars or arms, welded to the hub (see Figure G.3). In order to get a correct calculation, these parts must be described separately.

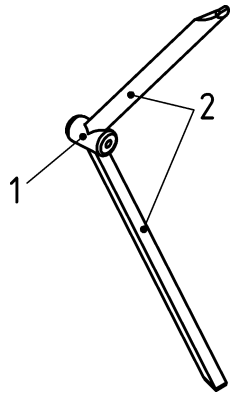

Key

1 Hub
2 Arm

Figure G.3 — two-arm leaf

<u>Calculating the Mass Moment of Inertia of the Hub:</u>

The hub can usually be assumed as a full cylinder rotating around its axis (see Figure G.4):

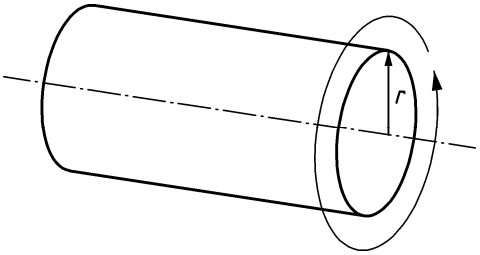

Key

r radius

Figure G.4 — Hub

If the mass and the radius of this cylinder are known, the mass moment of inertia can easily be calculated by using the following formula:

$$J = \frac{1}{2}\, m \cdot r^2$$

where

J mass moment of inertia of the hub;

m mass of the hub;

r radius of the hub.

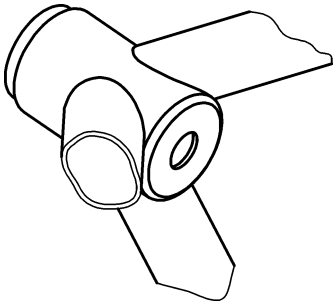

Figure G.5 —Hub with three arms

Example of calculation for hub:

Mass m (calculated or weighted): 1 kg

Radius r = 0,025 m

$\underline{J_{hub}}$ = 0,5 · 1 kg · (0,025 m)^2 = **<u>0,003 125 kg·m²</u>**

<u>Calculation of the Mass Moment of Inertia of the arms:</u>

An arm of the leaf is a rod rotating around its end (see Figure G.6):

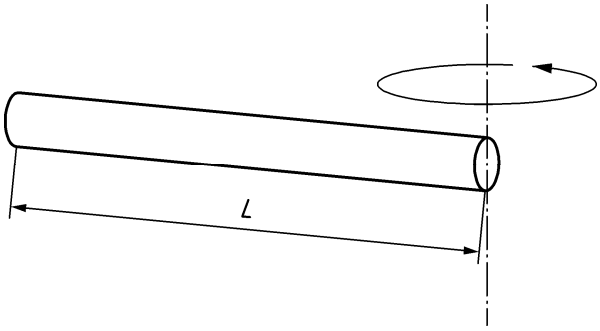

Key

L length

Figure G.6 — Arm

If the mass and the length of the arm are known, the mass moment of inertia can easily be calculated by using the following formula:

$$J = \frac{1}{3}\, m \cdot L^2$$

where

J mass moment of inertia of the arm;

m mass of the arm;

r length of the arm.

NOTE 1 The radius r of the rod (as shown in Figure G.4) is mathematically considered as zero, which in practice means "insignificantly small radius".

If the arms are rotating in a right angle, it is easy to see what the radius is (see Figure G.7):

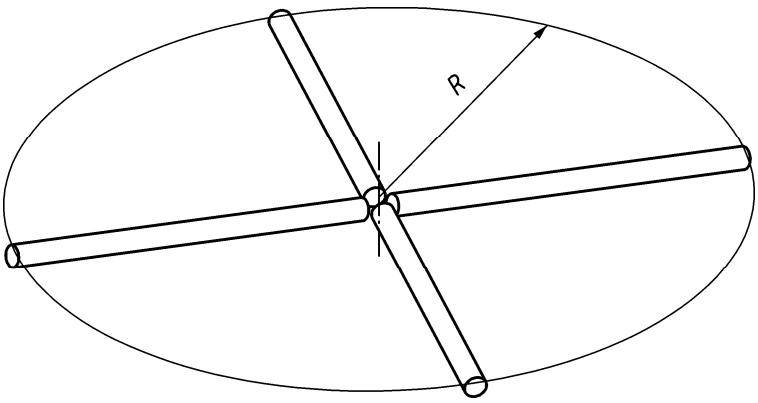

Key

R radius

Figure G.7 — Arms without hub rotating in a right angle

If the mass and the length of the arms are known, the mass moment of inertia can easily be calculated by using the following formula:

$$J = \frac{1}{3}\, m \cdot R^2$$

where

J mass moment of inertia of the arms;

m mass of the arms;

R radius.

NOTE 2 It is assumed that the radius of the hub is mathematically considered as zero, which in practice means "of insignificantly small radius".

If the arms are rotating under an angle (≠ 90°), the normal distance from the rotating end of the arm to the rotation axis is used. This is the radius R shown in Figure G.8:

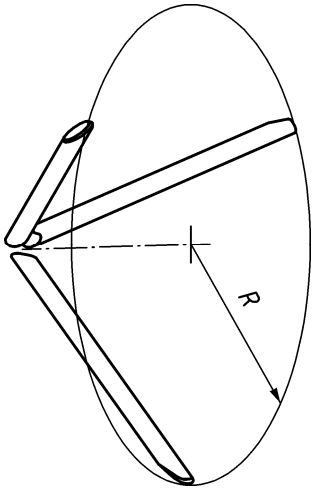

Figure G.8 — Arms are rotating under an angle (≠ 90°)

If the mass and the length of the arms are known, the mass moment of inertia can easily be calculated by using the following formula:

$$J = \frac{1}{3}\, m \cdot R^2$$

where

J mass moment of inertia of the arms;

m mass of the arms;

R radius.

NOTE 3 It is assumed that the radius of the hub is mathematically considered as zero, which in practice means "insignificantly small radius".

Example of calculation for arms:

Mass *m* (of **all** arms, calculated or weighted): 2 kg

Radius *R*: 0,4 m

$\underline{J_{arms}}$ = 1/3 · 2 kg · (0,4 m)^2 = **<u>0,1067 kg m²</u>**

<u>Example of Calculation of the Mass Moment of Inertia for the entire leaf</u>:

$\underline{J_{leaf}}$ **=** J_{hub} **+** J_{arms} **=** (0,003 125 + 0,106 7) kg m^2 **= <u>0,1098 kg m²</u>**

Though in this example the hub bears **a third** of the mass of the leaf, the hub is playing a very minor role for the mass moment of inertia (about 3 %). This is due to its very small radius compared with the radius of the arms (also considering the fact that the square radius is used).

Conclusion 1: The influence of the hub can be discarded (as long as the hub is not outstanding big and heavy).

Conclusion 2: The mere mass of the leaf does not give useful information about its mass moment of inertia.

Annex H
(informative)

Relationship between hazards, hazardous situations and hazardous events covered by this standard and relevant requirements and test methods subclauses

This annex contains a cross-reference between the significant hazards, hazardous situations and events listed in clause 4 and the relevant requirements and test method subclauses.

Table H.1 — Cross-reference table between hazard, requirement and test method subclauses

Type or group of hazard	Hazard subclause	Requirements subclause	Test methods subclause
Mechanical hazards	4.2	5.2	6.2
	4.3	5.3	6.3
	4.4	5.4	6.4
	4.5	5.5	6.5
	4.6	5.6	6.6
	4.7	5.7	6.7
	4.8	5.8	6.8
	4.9	5.9	6.9
	4.10	5.10	6.10
	4.11	5.11	6.11
Electrical, fire and thermal hazards	4.4	5.4	6.4
Ergonomic hazard	4.6	5.6	6.6

Annex ZA
(informative)

Relationship between this European Standard and the essential requirements of Directive 2006/42/EC aimed to be covered

This European Standard has been prepared under a Commission's standardization request M/396 to provide one voluntary means of conforming to Essential Requirements of Directive 2006/42/EC of the European Parliament and of the Council of 17 May 2006 on machinery, and amending Directive 95/16/EC (recast).

Once this standard is cited in the Official Journal of the European Union under that Directive, compliance with the normative clauses of this standard given in Table ZA.1 confers, within the limits of the scope of this standard, a presumption of conformity with the corresponding essential requirements of that Directive, and associated EFTA regulations.

Table ZA.1 — Correspondence between this European Standard and Annex 1 of Directive 2006/42/EC

Essential Requirements of Directive	Clause(s)/subclause(s) of this EN	Remarks/Notes
1.1.2	5.1	
1.1.3	5.7, 5.8	
1.1.5	5.6, 5.7	
1.1.6	5.6, 7.2	
1.1.7	A	
1.2.1	5.4, 5.5	
1.2.2	A.6	
1.2.3	5.4, 5.5, 5.6	
1.2.5	5.5, A.7	
1.2.6	5.4, 5.5	
1.3	5.2, 5.3, 7.2 C	
1.3.1	5.7	
1.3.2	5.7	
1.3.3	5.7, 5.8	
1.3.4	5.8, 5.11	
1.3.6	5.9	
1.3.7	5.4, 5.5, 5.6, 5.7, 5.9	
1.3.8.2	5.2.3	
1.4.3	5.2.3, 5.2.5	
1.5.1	5.4	

1.5.14	5.3, 5.10	
1.6.1	7	
1.7	7.2	
1.7.1.2	7.2	
1.7.2	7.2	
1.7.3	7.3	
1.7.4.1	7.2	
1.7.4.2	7.2	

WARNING 1 — Presumption of conformity stays valid only as long as a reference to this European Standard is maintained in the list published in the Official Journal of the European Union. Users of this standard should consult frequently the latest list published in the Official Journal of the European Union.

WARNING 2 — Other Union legislation may be applicable to the product(s) falling within the scope of this standard.

Bibliography

prEN 17210:2019, *Accessibility and usability of the built environment — Functional requirements*

CEN/TC 33 Secretariat

"Doors, windows, shutters, building hardware and curtain walling"

"Portes, fenêtres, fermetures, quincaillerie de bâtiment et façades rideaux"

"Türen, Tore, Fenster, Abschlüsse, Baubeschläge und Vorhangfassaden"

CEN/TC 33/WG 9 N 194

CEN/TC 33 N 3776

2019-04-26

Result of the CEN Enquiry on EN 17352, 00033559

Power operated pedestrian entrance control equipment - Safety in use - Requirements and test methods

➔ Approved by NSBs with technical and editorial comments

Action: For information

Source: NSBs

Comments: **Next step: examination of the comments by WG 9 and preparation of the final draft for the Formal Vote.**

Your correspondent : Nathalie GIRARDOT **Secretary :** Elisabeth DERCHÉ ligne directe : +33 (0)1 41 62 86 70 ligne directe : +33 (0)1 41 62 81 45 nathalie.girardot@afnor.org elisabeth.derche@afnor.org

11, rue Francis de Pressensé – F-93571 La Plaine Saint-Denis Cedex – Tél : +33 (0)1 41 62 80 00 – Fax : +33 (0)1 49 17 90 00 SIRET 775 724 818 00205

Voting Results

Ballot Information	
Ballot reference	**prEN 17352**
Ballot type	**ENQ (Enquiry)**
English title	**Power operated pedestrian entrance control equipment - Safety in use - Requirements and test methods**
French title	
German title	**Kraftbetätigte Zugangskontrolleinrichtungen - Nutzungssicherheit - Anforderungen und Prüfverfahren**
Work item Id	**67038**
Work item number	**00033559**
Procedure iteration	**1**
Vienna agreement status	**None**

Committee reference	**CEN/TC 33**
Committee secretariat	**France (AFNOR)**
Opening date	**2019-01-31**
Initial closing date	**2019-04-25**
Closing date	**2019-04-25**
Note	

Result of voting

(National Members having abstained are not counted in this vote.)

Approved by National Members

National Members approving: 18
National Members disapproving: 0
Number of Members approving: 100.000 % (requirement >= 55 %)
Weighted percentage of Population approving: 100.000 % (requirement >= 65 %)

Member responses	
Votes cast (32)	Austria (ASI) Belgium (NBN) Bulgaria (BDS) Croatia (HZN) Cyprus (CYS) Czech Republic (UNMZ) Denmark (DS) Estonia (EVS) Finland (SFS) France (AFNOR) Germany (DIN) Greece (NQIS ELOT) Iceland (IST) Ireland (NSAI) Italy (UNI) Latvia (LVS) Lithuania (LST) Malta (MCCAA) Netherlands (NEN) North Macedonia (ISRSM) Norway (SN) Poland (PKN) Portugal (IPQ) Romania (ASRO) Serbia (ISS) Slovakia (UNMS SR) Slovenia (SIST) Spain (UNE) Sweden (SIS) Switzerland (SNV) Turkey (TSE) United Kingdom (BSI)
Comments submitted (0)	
Votes not cast (2)	Hungary (MSZT) Luxembourg (ILNAS)

Questions	
Q.1	Do you approve this draft as a European Standard
Q.2	Do you agree with the proposed implementation periods?
Q.3	Do you have any comments ?
Q.4	National legislation/administrative deviation

Vote Matrix

	Date	Q.1	Q.2	Q.3	Q.4
Austria (ASI), Member, Inside EEA	2019-04-16	Yes	Yes	No	No Answer
Belgium (NBN), Member, Inside EEA	2019-04-23	Yes	Yes	Yes	No
Bulgaria (BDS), Member, Inside EEA	2019-04-17	Yes	Yes	No	No
Croatia (HZN), Member, Inside EEA	2019-04-24	Abstains	Abstain	No	No Answer
Cyprus (CYS), Member, Inside EEA	2019-03-15	Abstains	Yes	No	No Answer
Czech Republic (UNMZ), Member, Inside EEA	2019-04-25	Yes	Yes	No	No
Denmark (DS), Member, Inside EEA	2019-04-17	Yes	Yes	No	No Answer
Estonia (EVS), Member, Inside EEA	2019-04-15	Yes	Yes	No	No Answer
Finland (SFS), Member, Inside EEA	2019-04-04	Yes	Yes	No	No Answer
France (AFNOR), Secretariat, Inside EEA	2019-04-15	Yes	Yes	Yes	No
Germany (DIN), Member, Inside EEA	2019-04-16	Yes	Yes	Yes	No Answer
Greece (NQIS ELOT), Member, Inside EEA	2019-04-22	Yes	Yes	No	No Answer
Hungary (MSZT), Member, Inside EEA	Not Voted	-	-	-	-
Iceland (IST), Member, Inside EEA	2019-04-23	Abstains	Yes	No	No
Ireland (NSAI), Member, Inside EEA	2019-04-17	Yes	Yes	No	No Answer
Italy (UNI), Member, Inside EEA	2019-04-20	Yes	Yes	Yes	No Answer
Latvia (LVS), Member, Inside EEA	2019-04-05	Abstains	Yes	No	No Answer
Lithuania (LST), Member, Inside EEA	2019-04-03	Yes	Yes	No	No Answer
Luxembourg (ILNAS), Member, Inside EEA	Not Voted	-	-	-	-
Malta (MCCAA), Member, Inside EEA	2019-03-11	Abstains	Yes	No	No

Netherlands (NEN), Member, Inside EEA	2019-04-18	Yes	Yes	No	No
North Macedonia (ISRSM), Member, Outside EEA	2019-04-15	Abstains	Abstain	No	No Answer
Norway (SN), Member, Inside EEA	2019-02-18	Yes	Yes	No	No Answer

Vote Matrix

	Date	Q.1	Q.2	Q.3	Q.4
Poland (PKN), Member, Inside EEA	2019-04-23	Yes	Yes	No	No Answer
Portugal (IPQ), Member, Inside EEA	2019-04-23	Abstains	Abstain	No	No Answer
Romania (ASRO), Member, Inside EEA	2019-04-03	Yes	Abstain	No	No Answer
Serbia (ISS), Member, Outside EEA	2019-04-24	Abstains	Abstain	No	No Answer
Slovakia (UNMS SR), Member, Inside EEA	2019-04-16	Abstains	Abstain	No	No
Slovenia (SIST), Member, Inside EEA	2019-04-23	Yes	Yes	No	No
Spain (UNE), Member, Inside EEA	2019-04-03	Abstains	Abstain	No	No Answer
Sweden (SIS), Member, Inside EEA	2019-04-02	Abstains	Abstain	No	No Answer
Switzerland (SNV), Member, Outside EEA	2019-03-29	Abstains	Abstain	No	No Answer
Turkey (TSE), Member, Outside EEA	2019-04-24	Abstains	Abstain	No	No Answer
United Kingdom (BSI), Member, Inside EEA	2019-04-23	Abstains	Abstain	No	No Answer

Answers to Q.1: "Do you approve this draft as a European Standard"

18 x	**Yes**	Austria (ASI), Belgium (NBN), Bulgaria (BDS), Czech Republic (UNMZ), Denmark (DS), Estonia (EVS), Finland (SFS), France (AFNOR), Germany (DIN), Greece (NQIS ELOT), Ireland (NSAI), Italy (UNI), Lithuania (LST), Netherlands (NEN), Norway (SN), Poland (PKN), Romania (ASRO), Slovenia (SIST)
0 x	**No**	
14 x	**Abstains**	Croatia (HZN), Cyprus (CYS), Iceland (IST), Latvia (LVS), Malta (MCCAA), North Macedonia (ISRSM), Portugal (IPQ), Serbia (ISS), Slovakia (UNMS SR), Spain (UNE), Sweden (SIS), Switzerland (SNV), Turkey (TSE), United Kingdom (BSI)

Answers to Q.2: "Do you agree with the proposed implementation periods?"		
11 x	**Abstain**	Croatia (HZN), North Macedonia (ISRSM), Portugal (IPQ), Romania (ASRO), Serbia (ISS), Slovakia (UNMS SR), Spain (UNE), Sweden (SIS), Switzerland (SNV), Turkey (TSE), United Kingdom (BSI)
21 x	**Yes**	Austria (ASI), Belgium (NBN), Bulgaria (BDS), Cyprus (CYS), Czech Republic (UNMZ), Denmark (DS), Estonia (EVS), Finland (SFS), France (AFNOR), Germany (DIN), Greece (NQIS ELOT), Iceland (IST), Ireland (NSAI), Italy (UNI), Latvia (LVS), Lithuania (LST), Malta (MCCAA), Netherlands (NEN), Norway (SN), Poland (PKN), Slovenia (SIST)
0 x	**No**	

Answers to Q.3: "Do you have any comments ?"		
4 x	**Yes**	Belgium (NBN), France (AFNOR), Germany (DIN), Italy (UNI)

28 x	**No**	Austria (ASI), Bulgaria (BDS), Croatia (HZN), Cyprus (CYS), Czech Republic (UNMZ), Denmark (DS), Estonia (EVS), Finland (SFS), Greece (NQIS ELOT), Iceland (IST), Ireland (NSAI), Latvia (LVS), Lithuania (LST), Malta (MCCAA), Netherlands (NEN), North Macedonia (ISRSM), Norway (SN), Poland (PKN), Portugal (IPQ), Romania (ASRO), Serbia (ISS), Slovakia (UNMS SR), Slovenia (SIST), Spain (UNE), Sweden (SIS), Switzerland (SNV), Turkey (TSE), United Kingdom (BSI)

Answers to Q.4: "National legislation/administrative deviation"		
0 x	**Yes**	
9 x	**No**	Belgium (NBN), Bulgaria (BDS), Czech Republic (UNMZ), France (AFNOR), Iceland (IST), Malta (MCCAA), Netherlands (NEN), Slovakia (UNMS SR), Slovenia (SIST)
23 x	**No Answer**	Austria (ASI), Croatia (HZN), Cyprus (CYS), Denmark (DS), Estonia (EVS), Finland (SFS), Germany (DIN), Greece (NQIS ELOT), Ireland (NSAI), Italy (UNI), Latvia (LVS), Lithuania (LST), North Macedonia (ISRSM), Norway (SN), Poland (PKN), Portugal (IPQ), Romania (ASRO), Serbia (ISS), Spain (UNE), Sweden (SIS), Switzerland (SNV), Turkey (TSE), United Kingdom (BSI)

Comments from Voters	
Belgium (NBN) Cast by BBRI, Normen Mr	
Comment File	prEN 17352_NBN.doc
France (AFNOR) Cast by Quentin, Corinne Mme	
Comment File	prEN 17352_AFNOR.doc

Germany (DIN) Cast by Committee Service Centre, DIN -	
Comment File	prEN 17352_DIN.doc
Italy (UNI) Cast by De Gregorio, Marco Mr	
Comment File	prEN 17352_UNI.doc

Template for comments and secretariat observations

Date:2019-04-26	Document: CEN/TC 33 N 3776	Project: prEN 17352

MB/ NC[1]	Line number	Clause/ Subclause	Paragraph/ Figure/Table	Type of comment[2]	Comments	Proposed change	Observations of the secretariat
IT3 001			03.12	ed	*power operated mechanism, including controls, for moving, positioning and retaining the door leaf* Delete 'door'	Modify as follows *power operated mechanism, including controls, for moving, positioning and retaining the leaf(ves)*	Agreed
DE 002			Fig. 1, 2, 5, 6, 7	te	- Cropping of figure not correct (outline of figure with white areas). - No or wrong compression of the figure. - Figure is not language-neutral. - Figure size not identical to figure size in the manuscript.	- Please adjust figure cropping (crop figure to outline). - Required compression: CCITT G4 at 1 bit colour depth (black-and-white). Required compression: LZW at 8 bit or 24 bit colour depth (greyscale resp. colour). - Please replace the text by item references or footnotes. - Please adjust the figure size to the figure size in the manuscript.	DIN ask to provide more details and help to create figures in the required style Fig 1 – 7 Andreas Wotke
DE 003			Fig. 3, 4	te	- Cropping of figure not correct (outline of figure with white areas). - No or wrong compression of the figure. - Figure size not identical to figure size in the manuscript.	- Please adjust figure cropping (crop figure to outline). - Required compression: CCITT G4 at 1 bit colour depth (black-and-white). Required compression: LZW at 8 bit or 24 bit colour depth (greyscale resp. colour). - Please adjust the figure size to the figure size in the manuscript.	DIN ask to provide more details and help to create figures in the required style
DE 004			Fig. 8, B.2a, B.2b	te	- Cropping of figure not correct (outline of figure with white areas). - Figure size not identical to figure size in the manuscript.	- Please adjust figure cropping (crop figure to outline). - Please adjust the figure size to the figure size in the manuscript.	DIN ask to provide more details and help to create figures in the required style Fig. 8 – Andreas Wotke Fig B2-6 – Daan van Beusekom Fig. C2-7 – Daan van Beusekom Fig. D1-D5 Daan van Beusekom Fig. G Christoph Sondegger

1 **MB** = Member body / **NC** = National Committee (enter the ISO 3166 two-letter country code, e.g. CN for China; comments from the ISO/CS editing unit are identified by **)
2 **Type of comment:** **ge** = general **te** = technical **ed** = editorial

Template for comments and secretariat observations

Date:2019-04-26	Document: CEN/TC 33 N 3776	Project: prEN 17352

MB/ NC[1]	Line number	Clause/ Subclause	Paragraph/ Figure/Table	Type of comment[2]	Comments	Proposed change	Observations of the secretariat
DE 005			Note	Ed/te	NOTE Vulnerable people are persons having reduced physical, sensory or mental capabilities (e.g. partially disabled, elderly having some reduction in their physical and mental capabilities), or lack of experience and knowledge (e.g. children between 8 years and 14 years). There is a need to explain why this user group is	Add the following sentence to the note: Power operated pedestrian entrance control equipment are according to their function and purpose not designed to serve the needs of vulnerable people. Where accessible entrance control equipment is required, the needs of vulnerable people has to be taken into account already at the design stage as indicated in prEN 17210 "Accessibility and usability of the built	Agreed
					excluded and where to find information when planning entrance control equipment especially for vulnerable people.	environment – Functional requirements "(in preparation)	
FR 006		01		Ge	Scope should be more precise such as high turnstiles with glazed leaves, curved or straight airlocks for access control or single passage, do not seem to be mentioned in the draft standard? (not in the examples in Annex F) For some of the equipment mentioned in the list to which the standard does not apply, understanding is not obvious example: (motorized pedestrian access control equipment for people with special needs) What about products in industrial areas too? Expand the type of equipment: What about the nonreturn corridors not included in this standard? and all security airlocks in general? Maritime stations to be excluded? + Check Annex F for figures (example: a revolving safety door)	In order to remove any ambiguity, a little more precision should be provided on this equipment.	WG9 Agreed in principle add interlocking picture to paragraph F.2 and F.3 (provided by Andreas Wotke)
FR 007		01		Ge	"product" standards EN 16361, EN 13241 etc. have just been revised to include the EN 16034 standard for fire resistance	What to include or exclude the fire resistance part in the scope of this standard?	This is a Machinery Standard. Fire is in CPR

1 **MB** = Member body / **NC** = National Committee (enter the ISO 3166 two-letter country code, e.g. CN for China; comments from the ISO/CS editing unit are identified by **)
2 **Type of comment:** **ge** = general **te** = technical **ed** = editorial

Template for comments and secretariat observations

Date:2019-04-26	Document: CEN/TC 33 N 3776	Project: prEN 17352

MB/ NC[1]	Line number	Clause/ Subclause	Paragraph/ Figure/Table	Type of comment[2]	Comments	Proposed change	Observations of the secretariat
DE 008		01	Last but one paragraph	ed	"It is recognized that very vulnerable people may have needs beyond the level addressed in this standard." Who recognizes? What consequences does this have? We propose to change he phrase editorially.	Amend sentence to read: The level of requirements of very vulnerable people may extend beyond the level addressed in this standard.	Agreed
DE 009		01.01	2nd para	ge	„Emergency exits“ is missing in the sentence.	Modify sentence as follows: …as well as in escape routes **and emergency exits**”	Agreed
DE 010		03		ge	EN 12100	EN ISO 12100	Agreed
IT1 011		03	03.2	ed	*power operated pedestrian entrance control equipment rotated for an operating cycle around a vertical axis.* We suggest to improve the wording.	Modify as follows power operated pedestrian entrance control equipment which rotates around a vertical axis during an operating cycle	Agreed
DE 012		03	03.2	ge	Terms shall in general be presented in their basic grammatical form, i.e. nouns in the singular, verbs in the infinitive.	Please move the adjectives in front of the noun.	Agreed IT011
IT2 013		03	03.3	ed	*power operated pedestrian entrance control equipment with one or more elements (e.g. straight bars, curved bars, glass elements etc.) rotated for an operating cycle in an angle of the horizontal axis.* We suggest to improve the wording.	Modify as follows power operated pedestrian entrance control equipment with one or more elements (e.g. straight bars, curved bars, glass elements etc.) which rotates around an horizontal axis, with an angle variation, during an operating cycle	Agreed, without the angle variation
DE 014		03	03.6	ge	Only one definition per terminological entry is allowed. If a term is used to define more than one concept, a separate terminological entry shall be created for each concept and the domain shall be included in angle brackets before the definition. [see ISO/IEC Directives - Part 2:2016, 16.5.5]	change 2nd sentence into a note	Agreed

1 **MB** = Member body / **NC** = National Committee (enter the ISO 3166 two-letter country code, e.g. CN for China; comments from the ISO/CS editing unit are identified by **)
2 **Type of comment:** **ge** = general **te** = technical **ed** = editorial

Template for comments and secretariat observations

Date:2019-04-26	Document: CEN/TC 33 N 3776	Project: prEN 17352

MB/ NC[1]	Line number	Clause/ Subclause	Paragraph/ Figure/Table	Type of comment[2]	Comments	Proposed change	Observations of the secretariat
DE 015		03	New	Ge	Definition for „break out“ is missing	Add definition: **3.x break out** **System whereby elements (e.g. bars, glass elements etc.) of a power operated pedestrian entrance control equipment can be pushed manually to open the escape way**	Agreed
FR 016		03.03		ge	« … one or more elements **(**e.g. straight bars, … » bracket is bold	Remove bold	Agreed
FR 017		03.04		ge	« … equipment with elements **(**e.g. straight bars, … » bracket is bold	Remove bold	Agreed
FR		03.08;3.9;3.10			3.8 main closing edge / 3.9 opposing closing edge / 3.10 secondary closing edge These definitions are not easy to understand.	Add a figure to help.	Disagree; Clear enough
018							
FR 019		04.01		Ed	This clause contains all the significant hazards, hazardous situations and events identified by risk assessment as significant for this type of machinery and which require action to eliminate or reduce the risk. Redundancy.	This clause contains all the hazards, hazardous situations and events identified by risk assessment as significant for this type of machinery and which require action to eliminate or reduce the risk.	Agree
DE 020		04.01	New note	Ed/te	Automated e. g. biometric entrance control systems are included in the scope of this standard. Hence, it is recommended to inform users on whether access has been granted or not. Otherwise users might hurt themselves when bumping into a closed entrance system	Add a new note: Additional visual or acoustic signage to guide users might be helpful.	Agree

1 **MB** = Member body / **NC** = National Committee (enter the ISO 3166 two-letter country code, e.g. CN for China; comments from the ISO/CS editing unit are identified by **)

2 **Type of comment:** **ge** = general **te** = technical **ed** = editorial

Template for comments and secretariat observations

Date:2019-04-26	Document: CEN/TC 33 N 3776	Project: prEN 17352

MB/ NC[1]	Line number	Clause/ Subclause	Paragraph/ Figure/Table	Type of comment[2]	Comments	Proposed change	Observations of the secretariat
IT4 021		04.02		ed	According to def. 3.7 Leaf is a moving element of the power operated pedestrian entrance control equipment; it can be e.g. a bar, a number of bars fixed to a vertical post, a grid, a panel, etc. We suggest, so, to align the wording, using leaf instead 'moving element'	Modify Moving element(s) → leaf(ves)	Agreed
FR 022		04.03		Ed	An impact hazard exists: - between the leaf and a person going through the power operated pedestrian entrance equipment; - and for turnstiles between the next person going through the turnstile and the reflected stopped leaf. Is “reflected” really appropriate here?		Agreed: IT5 023
IT5 023		04.03	2 §	te	*and for turnstiles between the next person going through the turnstile and the reflected stopped leaf.* The term 'reflected' can lead to misunderstanding. We suggest to improve the wording.	Proposal: between the next person going through the turnstile and the stopped leaf which follows the passage of the first person (can this formulation explain the concept of reflected stopped leaf?)	Agreed
IT6 024		04.03	3 §	ed	See IT4		Agreed: IT4 021
IT7 025		04.07	1 §	ed	See IT4		Agreed: IT4

1 **MB** = Member body / **NC** = National Committee (enter the ISO 3166 two-letter country code, e.g. CN for China; comments from the ISO/CS editing unit are identified by **)
2 **Type of comment:** **ge** = general **te** = technical **ed** = editorial

Template for comments and secretariat observations

Date:2019-04-26	Document: CEN/TC 33 N 3776	Project: prEN 17352

MB/ NC[1]	Line number	Clause/ Subclause	Paragraph/ Figure/Table	Type of comment[2]	Comments	Proposed change	Observations of the secretariat
IT8 026		04.10	2 §	ed	*Hazards exist if a person can be imprisoned between two power operated pedestrian entrance control equipment and in addition for turnstiles also between two leaves and the surrounding part of the equipment.* We suggest also to improve the wording.	Modify as follows Hazards exist if a person can be imprisoned in area between two power operated pedestrian entrance control equipment and in addition, for turnstiles, also between two leaves and the surrounding part of the equipment.	Agreed
DE 027		05	05.2.1, 4.2 b)	ge/ed	The cross-reference to 5.2.3 seems to be corrected to read 5.2.4 (see4.2 a)3rd dash).	**Please check and correct accordingly.**	Agreed
DE 028		05	05.2.2	ge	**Each figure shall be explicitly referred to within the text.** [see ISO/IEC Directives - Part 2:2016, 28.4]	**Please check all references to figures and add where missing.**	Agreed
DE 029		05	05.2.3	ge	**The reference to EN ISO 13857 is to be dated in clause 2 and here.** **The reference to EN ISO 14120 is to be dated in case sub-clause 5.19 mentioned later on belongs to this standard.**	**Please check and add a dated reference. Make sure that there is no miss-interpretation possible.**	Agreed: should be done by the secretariat
DE 030		05	05.2.5	ge	To express values of physical quantities, Arabic numerals followed by the international symbol for the unit shall be used (see ISO 80000, IEC 80000 and IEC 60027). **[see ISO/IEC Directives - Part 2:2016, 9.1]**	**Please write 30 s instead of 30 seconds. Please check the whole document and change where appropriate.**	Agreed
DE 031		05	05.7	ge	The cross-reference to 4.8 seems to be corrected to read 4.7.	**Please check and change if appropriate.**	agreed
IT9 032		05.02.1	2 §	ed	*limiting the forces generated by the leaf when meeting a person or an obstacle (see 5.7).* Please check the reference.	Modify 5.7→ Annex C	Agreed

1 **MB** = Member body / **NC** = National Committee (enter the ISO 3166 two-letter country code, e.g. CN for China; comments from the ISO/CS editing unit are identified by **)
2 **Type of comment:** **ge** = general **te** = technical **ed** = editorial

Template for comments and secretariat observations

Date:2019-04-26	Document: CEN/TC 33 N 3776	Project: prEN 17352

MB/ NC[1]	Line number	Clause/ Subclause	Paragraph/ Figure/Table	Type of comment[2]	Comments	Proposed change	Observations of the secretariat
IT10 033		05.02.1	3 §	ed	*limiting the forces generated by the leaf when meeting a person or an obstacle (see 5.7).* Please check the reference.	Modify 5.7→ Annex C	Agreed
DE 034		05.02.1	Last sentence	te	Non-hazardous movement, if any, of the leaves needs not be safeguarded (i.e. opening movement of retractable lanes No acceptable safety level ((wir haten den Satz zwar wie vom VR vorgeschlagen gestrichen, allerdings aufgrund des Einspruchs des Consultants. Vielelicht sollten wir besser sein Argumentaion nehmen, die mir jetzt nicht vorliegt))	Delete sentence	Agreed
FR 035		05.02.2	Figure 5	ed	The cross-section C-C of Figure 5 is not a cross section but a view	« View C-C »	Agreed
FR 036		05.02.2	Figure 5	ed	Legend of Figure 5 « R ≥ 10 or protected ». This R has to be repeated in 5.11 for a better understanding.	Modify the 3rd § as follow : "Top corner of leaf of retractable lanes and swing lanes shall either be rounded with a radius R of ≥ 10mm or shall be protected (see Figures 5, 6 and 7)."	Agreed
FR 037		05.02.2	Figure 6	ed	The cross section C-C of Figure 5 is not a cross section but a view	"View C-C"	Agreed: figures will be modified
FR 038		05.02.2	Figures	ed	Legend of Figure 2 « Measure (mm) ». Measure is not usual	Modify as follow : « Dimensions (mm) »	Disagree, "measure" as technical term is ok
DE 039		05.02.2	Figures 3,4	te	The value D=50mm used in those figures is questionable:	D=40 mm	

1 **MB** = Member body / **NC** = National Committee (enter the ISO 3166 two-letter country code, e.g. CN for China; comments from the ISO/CS editing unit are identified by **)
2 **Type of comment:** **ge** = general **te** = technical **ed** = editorial

Template for comments and secretariat observations

Date:2019-04-26	Document: CEN/TC 33 N 3776	Project: prEN 17352

MB/ NC[1]	Line number	Clause/ Subclause	Paragraph/ Figure/Table	Type of comment[2]	Comments	Proposed change	Observations of the secretariat
					50mm is not a value defined in the EN 13857. The median distal middle-hand thickness for adult males is 36mm and in general the grip would be “fingers over the bar” where 25mm is an accepted value. For vertical full-height turnstiles, the Value 50mm for the lowest bar can even be dangerous. The heels of a person walking through are the most probable impact point and a lower value (between 25-40mm) is much safer, especially with straight bars. In combination with vertical full-height turnstiles which are certified for burglary resistance (RCx or german WKx) there are maximum allowed gaps of 120mm. Those products would conflict with either of the certification requirements, since you cannot fit a standard bar >20mm in the middle of the 120mm gap with 50mm clearance to each side.		Disagree, 50 mm is appropriate and common practice for safety
FR 040		05.02.3		ed	« … as specified in Tables 1 and 5 of EN ISO 13857. » Tables are specified so the standard should be dated	« … of EN ISO 13857 : 2008 » or add the date in Clause 2.	Agreed: should be done by secretariat
FR 041		05.02.3		ed	« … according to EN ISO 14120 with the exception of subclause 5.19... » Subclause is specified so the standard should be dated	« … of EN ISO 14120 : 2016 » or add the date in Clause 2.	Agreed: should be done by secretariat
DE 042		05.02.4		te	Full height turnstiles can reach a kinetic energy of 4,0 J under the condition that the minimum radius of the bars and of the accessible parts of the leaf is 10mm. The accessible parts of the leaf include the plastic cap at the end of the bar. A commonly used radius for this end piece is 3-4mm. There is no reason to doubt the safety of a used standard in the industry.	Full height turnstiles can reach a kinetic energy of 4,0 J under the condition that the minimum radius of the bars and of the accessible parts of the leaf is 10mm (not applicable for soft bar end-pieces made of f.e. plastic)	Disagree, min. 10 mm is appropriate in relation with 4J

1 **MB** = Member body / **NC** = National Committee (enter the ISO 3166 two-letter country code, e.g. CN for China; comments from the ISO/CS editing unit are identified by **)
2 **Type of comment:** **ge** = general **te** = technical **ed** = editorial

Template for comments and secretariat observations

Date:2019-04-26	Document: CEN/TC 33 N 3776	Project: prEN 17352

MB/ NC[1]	Line number	Clause/ Subclause	Paragraph/ Figure/Table	Type of comment[2]	Comments	Proposed change	Observations of the secretariat
FR 043		05.02.4		ed	« E kin =1/2 Jω 2 where E kin is the kinetic energy in J …» Isn't there a risk of confusion between the "J" in the formula and the "joule" symbol?	"…E kin is the kinetic energy in Joule …"	Agree
IT11 044		05.02.4	1 §	te	*The force required to manually prevent a stopped power operated pedestrian entrance control equipment from moving any further - measured at the main closing edge in the direction of travel - shall not exceed 67 N at any point of the movement.* If the power operated pedestrian entrance control equipment is 'stopped' it's not clear how to apply the requirements.	Proposal Delete 'stopped'.	Disagree, term "stopped" is used in combination 67N for low energy, also in other comparable standards.
IT13 045		05.02.4	4 §	ed	See IT4		Agree: See IT4
IT12 046		05.02.4	4 §	ed	*In the event of any interruption of power supply or failure of the drive, either the equipment is stopped in closed position in one or both directions or it shall be possible to operate the moving element of the power operated pedestrian entrance control equipment with a manual force not exceeding 67 N and 90 N to start the movement, when the force is applied to the main closing edge in the direction of the movement.* We suggest to simplify the structure.	Modify as follows In the event of any interruption of power supply or failure of the drive, - *either the equipment is stopped in closed position in one or both directions* or - *it shall be possible to operate the leaf(ves) of the power operated pedestrian entrance control equipment with a manual force not exceeding 67 N and 90 N to start the movement, when the force is applied to the main closing edge in the direction of the movement.*	Agree

1 **MB** = Member body / **NC** = National Committee (enter the ISO 3166 two-letter country code, e.g. CN for China; comments from the ISO/CS editing unit are identified by **)
2 **Type of comment:** **ge** = general **te** = technical **ed** = editorial

Template for comments and secretariat observations

Date:2019-04-26	Document: CEN/TC 33 N 3776	Project: prEN 17352

MB/ NC[1]	Line number	Clause/ Subclause	Paragraph/ Figure/Table	Type of comment[2]	Comments	Proposed change	Observations of the secretariat
IT14 047		05.02.5	1 § 1st indent	ed	*… equipment leaf is reversed, or the equipment goes to the low energy mode of operation* *Modify the wording*	Modify as follows leaf is reversed, or the power operated pedestrian entrance control equipment goes to the low energy mode of operation	Agreed
FR 048	5	05.03			Subclause 5.2.4 refers to Low energy mode of operation and not Electro-Sensitive Protective Equipment (ESPE)	Refer to Subclause 5.2.5	Agreed
FR 049	7	05.03			Annex D refers to Stability measuring points and not Limitation of forces.	Refer to Annex C.	Agreed
IT17 050		05.03	2 § 5th indent	ed	*…(see 5.2.3)…* The reference is wrong.	Modify as follows …(see 5.2.4)…	Agreed
IT16 051		05.03	2 § 3nd indent	ed	*in such a way the equipment can be* We suggest to improve the wording	Modify as follows in such a way the power operated pedestrian entrance control equipment can be	Agreed
IT15 052		05.03	2 § 2nd indent	ed	*…(see Annex D)…* The reference is wrong.	Modify as follows …(see Annex B)…	Agreed: (see Annex C)
IT18 053		05.04	2 §	ed	*requirements of EN 60335-1* EN 60335-1 is general: we need a specific part		Agreed part -2-103

1 **MB** = Member body / **NC** = National Committee (enter the ISO 3166 two-letter country code, e.g. CN for China; comments from the ISO/CS editing unit are identified by **)
2 **Type of comment:** **ge** = general **te** = technical **ed** = editorial

Template for comments and secretariat observations

Date:2019-04-26	Document: CEN/TC 33 N 3776	Project: prEN 17352

MB/ NC[1]	Line number	Clause/ Subclause	Paragraph/ Figure/Table	Type of comment[2]	Comments	Proposed change	Observations of the secretariat
IT19 054		05.05	2 §	ed	*(e.g. in any fault condition low energy or force limitation cannot be exceeded)* We suggest to improve the wording.	Modify as follows (e.g. in any fault condition low energy mode of operation or force limitation cannot be disregarded)	Disagree: it's clear enough
DE 055		05.06		te	The maximum allowed physical effort to manually operate a power operated pedestrian entrance control equipment shall be according to 5.2.3 for low energy mode of operation equipment or ≤ 150 N for all other equipment when the force is applied to the main edge in the direction of the movement	The reference to 5.2.3 needs o be substituted by 5.2.4	Agreed
FR 056	5	05.06			Subclause 5.2.3 refers to Guards and not Low energy mode of operation.	Refer to Subclause 5.2.4	Agreed
IT20 057		05.06	1 § 2nd indent	ed	*power is on but the equipment is released.* We suggest to improve the wording	Modify as follows power is on but the power operated pedestrian entrance control equipment is released.	Agreed
IT21 058		05.06	2 §	ed	*… shall be according to 5.2.3* The reference is wrong	Modify as follows *… shall be according to 5.2.4*	Agreed
IT22 059		05.06	3 § 1nd indent	ed	…(see *5.2.3)* The reference is wrong	Modify as follows *… (see 5.2.4)*	Agreed

1 **MB** = Member body / **NC** = National Committee (enter the ISO 3166 two-letter country code, e.g. CN for China; comments from the ISO/CS editing unit are identified by **)
2 **Type of comment:** **ge** = general **te** = technical **ed** = editorial

Template for comments and secretariat observations

Date:2019-04-26	Document: CEN/TC 33 N 3776	Project: prEN 17352

MB/ NC[1]	Line number	Clause/ Subclause	Paragraph/ Figure/Table	Type of comment[2]	Comments	Proposed change	Observations of the secretariat
IT23 060		05.06	4 §	ed	*Additionally for full-height and half-height turnstiles it shall be checked that during manual operation means are put in place to limit the possible speed of the equipment according to Figure 8 when tested according to 6.6.* We suggest to improve the wording	Modify as follows Additionally for full-height and half-height turnstiles it shall be checked that during manual operation, the possible speed of the power operated pedestrian entrance control equipment is limited according to Figure 8 when tested according to 6.6.	Agreed
FR 061	1	05.07			Clause 4.8 refers to Hazards caused by glazing material and not to Hazards caused by loss of stability	Refer to Clause 4.7	Agreed
FR 062		05.07		Ed	Power operated pedestrian entrance control equipment is installed according to the installation instructions. "Shall" must be missing.	Power operated pedestrian entrance control equipment shall be installed according to the installation instructions.	Agreed: sentence was deleted due to consultant comment
IT24 063		05.07	1 §	ed	*Hazards listed in 4.8* The reference is wrong	Modify as follows Hazards listed in 4.7	Agreed
IT26 064		05.07	11 §	ed	*…declared by the manufacturer* We suggest to specify how the manufacturer has to declare.	Modify as follows	Agreed: sentence was deleted due to consultant comment
						…declared in the instructions by the manufacturer	
DE 065		05.07	4th para, 2nd sentence		Specification about application time of the load is missing	Modify second sentence as follows: A force of 1000 N shall be applied **in a continuous way within a time of 20s** for 60s to the cabinet…	Agree: A force of 1000 N shall be applied progressively from 0 to 1000N within 20 s and then remained applied

1 **MB** = Member body / **NC** = National Committee (enter the ISO 3166 two-letter country code, e.g. CN for China; comments from the ISO/CS editing unit are identified by **)
2 **Type of comment:** **ge** = general **te** = technical **ed** = editorial

Template for comments and secretariat observations

Date:2019-04-26	Document: CEN/TC 33 N 3776	Project: prEN 17352

MB/ NC[1]	Line number	Clause/ Subclause	Paragraph/ Figure/Table	Type of comment[2]	Comments	Proposed change	Observations of the secretariat
IT25 066		05.07	5 §	ed	*A force of 1000 N shall be applied for 60 s to the cabinet frame and the points of application shall be the most external possible ones of the frame and the closest possible ones to the leaf. The force shall be applied at a height of 1200 mm, or at the maximum height of the product if lower than 1200 mm, through a testing head of 80mm diameter* We suggest to improve the structure and the wording of the sentences.	*Modify as follows* *A force of 1000 N shall be applied for 60 s to the cabinet frame.* *The force shall be applied* - *At a point as far external as possible to the cabinet frame* - *At a point as far close as possible to the leaf* *The force shall be applied at a height of 1200 mm, or at the maximum height of the product if lower than 1200 mm* *The force shall be applied through a testing head of 80mm diameter*	Agreed: together with DE065
FR 067		05.08		te	« Plastic leaves shall be break resistant according EN ISO 179-1. » EN ISO 179-1 is a standard for test and not requirement.	Specify the value of break resistant	Homework Mark de Jong
IT29 068		05.10	2 § 4st indent	ed	*…the equipment* Modify 'equipment'	Modify equipment → power operated pedestrian entrance control equipment	Agreed
IT28 069		05.10	2 § 1st indent	ed	*either giving the user the possibility to manually open at least in one direction the power operated pedestrian entrance control equipment with a physical effort according to 5.6* We suggest to improve the wording	Modify as follows *- manually operating the power operated pedestrian entrance control equipment – at least in one direction – with a physical effort according to 5.6*	Disagreed, wording clear as it is.
IT27 070		05.10	2 §	ed	*Imprisonment can be avoided..* We suggest to improve the wording	Modify as follows Imprisonment can be avoided by one of the following measures:	Agreed: sentence was modified due to consultant comment

1 **MB** = Member body / **NC** = National Committee (enter the ISO 3166 two-letter country code, e.g. CN for China; comments from the ISO/CS editing unit are identified by **)
2 **Type of comment:** **ge** = general **te** = technical **ed** = editorial

Template for comments and secretariat observations

Date:2019-04-26	Document: CEN/TC 33 N 3776	Project: prEN 17352

MB/ NC[1]	Line number	Clause/ Subclause	Paragraph/ Figure/Table	Type of comment[2]	Comments	Proposed change	Observations of the secretariat
FR 071		06.05		ed	« Compliance of safety related parts of the control system are assessed against EN ISO 13849 series. » In Clause 2, only EN ISO 13849-1 is noted.	In Clause 2, add EN ISO 13849 series.	Agreed in principal. Delete -1
DE 072		07.01		te	− “Dashing through a moving power operated pedestrian entrance control equipment can lead to serious injuries”. This sentence is to no avail for end users or provider of the service when written in the information for use	Delete sentence	Disagree, helpful information. Also to be found in EN 16005
FR 073		07.01		ge	« “Warning! Lack of maintenance can lead to unsafe operation.”»	Delete the dot : « … unsafe operation”; »	Agree
DE 074		07.01	03. Absatz	ed	"if the information for use is supplied in electronic form, it shall contain an instruction to the end user to print and keep available any information on safety-related issues that need immediate action. This information shall be clearly identified and supplied in a readily printable format". In this context, "end user" is not the right term because it designates the person actually using the system	delete „to the end user“	Agreed in principal
IT33 075		07.01	10 §	ed	*User manual…* Align the wording	Modify as follows User instruction…	Agreed in principal. Modified in instruction handbook
IT30 076		07.01	4 §	ed	*The information…* Align the wording	Modify as follows The information for use…	Agreed in principal. Modified in instruction handbook
IT32		07.01	9 §	ed	We suggest to improve the wording of the paragraph.	Modify as follows:	

1 **MB** = Member body / **NC** = National Committee (enter the ISO 3166 two-letter country code, e.g. CN for China; comments from the ISO/CS editing unit are identified by **)
2 **Type of comment:** **ge** = general **te** = technical **ed** = editorial

Template for comments and secretariat observations

Date:2019-04-26	Document: CEN/TC 33 N 3776	Project: prEN 17352

MB/ NC[1]	Line number	Clause/ Subclause	Paragraph/ Figure/Table	Type of comment[2]	Comments	Proposed change	Observations of the secretariat
077						When the power operated pedestrian entrance control equipment is provided with pneumatic drive units, the information for use shall additionally include − a prominent warning regarding the hazard caused by uncontrolled movement due to stored energy; − how stored energy can be safely released; In addition, means for releasing stored energy shall be suitable labelled.	Agreed
IT31 078		07.01	NEW §	ge	*We suggest to add a paragraph which recapitulates (and remarks) the information.*	The manufacturer shall provide information on operation, maintenance, inspection and frequency of maintenance and inspection Documents with instructions on how to correctly install and dismantle the power operated pedestrian entrance control equipment shall be provided where appropriate.	Disagree, already covered in following chapter 7.2
DE 079		07.02		te	The scope clearly states that this standard excludes "the use of the equipment by children younger than 8 years without supervision" This means that these children need o be supervised when using the entry systems covered by this standard, e. g. in public spaces like pools, airports etc. Hence, the user need to be informed that children need to be supervised when using the entrance systems.	Add a warning "Children must be taken by the hand" preferably as a pictogram.	Disagree: Children are not in the scope
IT34 080		A		ed	See IT4		Agreed
IT35 081		A	Note 2	ed	Move Note 2 under A.1		Disagree: references to national requirements can be only in the note

1 **MB** = Member body / **NC** = National Committee (enter the ISO 3166 two-letter country code, e.g. CN for China; comments from the ISO/CS editing unit are identified by **)
2 **Type of comment:** **ge** = general **te** = technical **ed** = editorial

Template for comments and secretariat observations

Date:2019-04-26	Document: CEN/TC 33 N 3776	Project: prEN 17352

MB/ NC[1]	Line number	Clause/ Subclause	Paragraph/ Figure/Table	Type of comment[2]	Comments	Proposed change	Observations of the secretariat
IT36 082		A.2		ed	*Safety related parts of the control system used for escape route functionality shall comply with EN ISO 13849-1 Performance Level "d" with a minimum of category 2 and any electrical faults preventing normal operation of the equipment shall either be detected automatically or detected after activation of the equipment within 15 s and cause the equipment to automatically open or to release the break out system.* We suggest to improve the wording and the structure.	Modify as follows Safety related parts of the control system of power operated pedestrian entrance control equipment used in escape route shall comply with EN ISO 13849-1 Performance Level "d" with a minimum of category 2. Any electrical faults preventing normal operation of the power operated pedestrian entrance control equipment shall either be detected automatically or detected after activation of the equipment within 15 s and cause the equipment to automatically open or to release the break out system.	Agreed
IT37 083		A.3	2 §	ed	*Reference to B.7 is wrong*	Modify B.7 into A.7	Agreed
IT38 084		A.4		ed	The reference B.5 and B.6 are wrong.	Modify as follows B.5 → A.5 B.6 → A.6	Agreed
FR 085		All Figures		Ge	Letters and arrows are not readable.	Increase letters and arrows and eventually figures for better readability.	Agreed
DE 086		Annex A		ge	The status of the annex (informative or normative) shall be made clear by the way in which it is referred to in the text and shall be stated under the heading of the annex, e.g. "see" – informative "shall be … as specified" – normative. [see ISO/IEC Directives – Part 2:2016, 20.2]	Please check and add references where appropriate.	Agreed

1 **MB** = Member body / **NC** = National Committee (enter the ISO 3166 two-letter country code, e.g. CN for China; comments from the ISO/CS editing unit are identified by **)
2 **Type of comment:** **ge** = general **te** = technical **ed** = editorial

Template for comments and secretariat observations

Date:2019-04-26	Document: CEN/TC 33 N 3776	Project: prEN 17352

MB/ NC[1]	Line number	Clause/ Subclause	Paragraph/ Figure/Table	Type of comment[2]	Comments	Proposed change	Observations of the secretariat
FR 087	5	Annex A	A.3		Clause B.7 does not exist.	Refer to Clause A.7	Agreed
DE 088		Annex A	A.3 2nd sentence.	ed	Reference on a wrong paragraph.	Replace B.7 by **A.7**	Agreed
DE 089		Annex A	A.4 4th para	Ge	A reference to paragraph A.8 should be added for the cycle test.	Modify last sentence as follows: “Upon completion of the cycle test **according to** **A.8**, they shall be subjected to a further 100 times test,”	Agreed
FR 090	14	Annex A	A.4		Clauses B.5 and B.6 do not exist.	Refer to A.5 and A.6	Agreed
DE 091		Annex A	A.4 last sentence	ed	Reference on a wrong paragraph.	Replace B.5 and B.6 by **A.5** and **A.6**	Agreed
DE 092		Annex A	A.6	te	"The initiating element shall be installed at a height between 600 mm and 1 200 mm from the finished floor level, in escape direction (see Figure A.1)." Wheelchair user need to be able to use the escape route and emergency exit independently. Hence, the initiating element needs to be installed at a maximum level of 850 mm above the finished floor level. A higher level might be too far to reach for people suffering from multiple impairments, not being able to raise arms and hands much above the armrest of the wheelchair.	Amend sentence to read: "The initiating element shall be installed at a height between 600 mm and 850 mm from the finished floor level, in escape direction (see Figure A.1)." Figure A.1 needs to be amended accordingly	Agreed; in line with the national requirements
FR 093		Annex A	A.6	ed	Add in Figure A.1, « Dimensions in mm ».	Add in Figure A.1, « Dimensions in mm ».	Agreed; Christian will modify the figure

1 **MB** = Member body / **NC** = National Committee (enter the ISO 3166 two-letter country code, e.g. CN for China; comments from the ISO/CS editing unit are identified by **)

2 **Type of comment:** **ge** = general **te** = technical **ed** = editorial

Template for comments and secretariat observations

Date:2019-04-26	Document: CEN/TC 33 N 3776	Project: prEN 17352

MB/ NC[1]	Line number	Clause/ Subclause	Paragraph/ Figure/Table	Type of comment[2]	Comments	Proposed change	Observations of the secretariat
DE 094		Annex A	A.8	Ge	Information about functionality after the durability test is missing.	Add sentence: **After the durability test the power operated pedestrian entrance control systems shall be fully functional.**	Agreed
DE 095		Annex A Annex F	Fig. A.1, F.1 to F.5	te	- Required resolution of the figure not correct (only 96 dpi). - Cropping of figure not correct (outline of figure with white areas). - Maximum size of 170 × 250 mm resp. 250 × 170 mm is exceeded.	- Please adjust resolution to 600 dpi. - Please adjust figure cropping (crop figure to outline). - Please adjust figure to maximum figure size.	Agreed
DE 096		Annex A	Figure A.1	ge	"Dimensions in …" is missing.	Please add.	Agreed
DE 097		Annex A	Notes	ed	Notes shall not contain requirements (e.g. use of "shall", see Table 3) or any information considered indispensable for the use of the document, for example instructions (imperative mood), recommendations (e.g. use of "should", see Table 4) or permission (e.g. use of "may", see Table 5). Notes should be written as a statement of fact. [see ISO/IEC Directives – Part 2:2016, 24.5]	Please check all notes and make sure that the information is not essential for the use of this standard.	Agreed
DE 098		Annex B		ge	The normative reference to IEC 61496-3:2008 is missing in clause 2.	Please check and add a reference.	Agreed
FR 099		Annex B		ge	« … see also Figure 2 of IEC 61496-3:2008. » This standard is not in Clause 2	Add IEC 61496-3:2008 in Clause 2	Agreed
DE 100		Annex B	Fig. B.1	te	- Figure size not identical to figure size in the manuscript. - Figure is not language-neutral.	- Please adjust the figure size to the figure size in the manuscript. - Please replace the text by item references or footnotes.	Agreed: Stefan will check

1 **MB** = Member body / **NC** = National Committee (enter the ISO 3166 two-letter country code, e.g. CN for China; comments from the ISO/CS editing unit are identified by **)
2 **Type of comment:** **ge** = general **te** = technical **ed** = editorial

Template for comments and secretariat observations

Date:2019-04-26	Document: CEN/TC 33 N 3776	Project: prEN 17352

MB/ NC[1]	Line number	Clause/ Subclause	Paragraph/ Figure/Table	Type of comment[2]	Comments	Proposed change	Observations of the secretariat
DE 101		Annex B Annex C	Fig. B.3 to B.6, C.1 to C.7	te	- Figure size not identical to figure size in the manuscript.	- Please adjust the figure size to the figure size in the manuscript.	Agreed
FR 102		Annex B	Figure B.1	ed	Figure B.1 « All dimensions are in millimeters. »	Delete the final dot : « … in millimeters»	Agreed
DE 103		Annex B	Last para	ed	Wrong reference	Replace reference to figures B.5 and B.6 to Figures **B.2** and **B.3**	Agreed
BE 104		Annex B	The sentence "It shall be checked that the test body BA is detected in the whole swept area of the moving elements."	te	This sentence is difficult to interpret. Does it mean: - that the tests should be repeated with the test body BA anywhere on the projection on the ground of the swept area of the moving elements and anywhere on the projection on a plane lifted 300mm from the floor of the swept area of the moving elements? Or - that the tests should be repeated with the test body BA lifted anywhere (at any height) in the swept area of the moving elements?	Please clarify the sentence.	Agreed in principal. Daan will modify the figures
FR 105		Annex B	titre	ed	« Test reference body» isn't it a reference test body ?	« Reference test body »	Agreed
DE 106		Annex C	1st para		25 N are wrong, must be 80 N		Agreed

1 **MB** = Member body / **NC** = National Committee (enter the ISO 3166 two-letter country code, e.g. CN for China; comments from the ISO/CS editing unit are identified by **)
2 **Type of comment:** **ge** = general **te** = technical **ed** = editorial

Template for comments and secretariat observations

Date:2019-04-26	Document: CEN/TC 33 N 3776	Project: prEN 17352

MB/ NC[1]	Line number	Clause/ Subclause	Paragraph/ Figure/Table	Type of comment[2]	Comments	Proposed change	Observations of the secretariat
DIN 107		Annex C	Figure C.1		a. Table 1 is wrong, must be Table C.1 b. 25 N is wrong, please delete c. Key: Tt: 25 N are wrong, must be 80 N	E DIN EN 17352:2019-03 prEN 17352:2019 (E) *– Entwurf –* 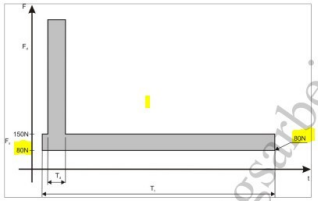 Key F_d maximum force measured during the dynamic period T_d (dynamic force) – see Table 1 for permitted values T_d period of time of maximum 0,75 s starting from the first measured force exceeding 150 N F_s maximum force measured outside the dynamic period T_d (static force) T_t period of 3 s starting from the first measured force exceeding 25 N and including T_d Figure C.1 — Force versus time	Agreed
FR 108		Annex C	Figure C1	Ed	Incoherence between the schema and the 80N text in the figure but 25N in the text	In EN 16005:2012, the requirements are 80N and a time of 5s. Now in the paragraph following the diagram we are at 25N and a time of 3s. Is it not better to align with EN 16005:2012?	Agreed on 80N. Disagree on 5 s
DE 109		Annex C	Table C.1			Please add F_{dmax} (Permissible dynamic forces) in table title	Disagree aligned with figure in EN16005
DE 110		Annex D Annex G	Fig. D.1, G.8	te	- Required resolution of the figure not correct (only 96 dpi). - No or wrong compression of the figure. - Figure size not identical to figure size in the manuscript.	- Please adjust resolution to 600 dpi. - Required compression: CCITT G4 at 1 bit colour depth (black-and-white). Required compression: LZW at 8 bit or 24 bit colour depth (greyscale resp. colour). - Please adjust the figure size to the figure size in the manuscript.	Agreed
DE 111		Annex D	Fig. D.2 to D.5	te	- Figure size not identical to figure size in the manuscript. - No or wrong compression of the figure.	- Please adjust the figure size to the figure size in the manuscript. - Required compression: CCITT G4 at 1 bit colour depth (black-and-white). Required compression: LZW at 8 bit or 24 bit colour depth (greyscale resp. colour).	Agreed

1 **MB** = Member body / **NC** = National Committee (enter the ISO 3166 two-letter country code, e.g. CN for China; comments from the ISO/CS editing unit are identified by **)

2 **Type of comment:** **ge** = general **te** = technical **ed** = editorial

Template for comments and secretariat observations

Date:2019-04-26	Document: CEN/TC 33 N 3776	Project: prEN 17352

MB/ NC[1]	Line number	Clause/ Subclause	Paragraph/ Figure/Table	Type of comment[2]	Comments	Proposed change	Observations of the secretariat
DE 112		Annex G	Fig. G.1, G.4 to G.6	te	- Required resolution of the figure not correct (only 96 dpi). - Cropping of figure not correct (outline of figure with white areas). - Maximum size of 170 × 250 mm resp. 250 × 170 mm is exceeded. - No or wrong compression of the figure.	- Please adjust resolution to 600 dpi. - Please adjust figure cropping (crop figure to outline). - Please adjust figure to maximum figure size. - Required compression: CCITT G4 at 1 bit colour depth (black-and-white). Required compression: LZW at 8 bit or 24 bit colour depth (greyscale resp. colour).	Agreed
DE 113		Annex G	Fig. G.2, G.7	te	- Required resolution of the figure not correct (only 96 dpi). - Maximum size of 170 × 250 mm resp. 250 × 170 mm is exceeded. - No or wrong compression of the figure.	- Please adjust resolution to 600 dpi. - Please adjust figure to maximum figure size. - Required compression: CCITT G4 at 1 bit colour depth (black-and-white). Required compression: LZW at 8 bit or 24 bit colour depth (greyscale resp. colour).	Agreed
DE 114		Annex G	Fig. G.3	te	- Required resolution of the figure not correct (only 96 dpi). - No or wrong compression of the figure. - Figure is not language-neutral. - Figure size not identical to figure size in the manuscript.	- Please adjust resolution to 600 dpi. - Required compression: CCITT G4 at 1 bit colour depth (black-and-white). Required compression: LZW at 8 bit or 24 bit colour depth (greyscale resp. colour). - Please replace the text by item references or footnotes. - Please adjust the figure size to the figure size in the manuscript.	Agreed
FR 115		Annex H	Table H.1		In the table H.1, in the column of requirements subclause, electrical and ergonomic hazard are not	Refer to 5.4 - 5.5 - 5.9 - 5.6	Agreed
					requirements but hazard subclauses.		
FR 116		Annex H	Table H.1	ed	In left column in Table H.1 : horizontal lines are to be deleted to avoid empty cells	Delete horizontal lines to avoid empty cells	Agreed

1 **MB** = Member body / **NC** = National Committee (enter the ISO 3166 two-letter country code, e.g. CN for China; comments from the ISO/CS editing unit are identified by **)
2 **Type of comment:** **ge** = general **te** = technical **ed** = editorial

Template for comments and secretariat observations

Date:2019-04-26	Document: CEN/TC 33 N 3776	Project: prEN 17352

MB/ NC[1]	Line number	Clause/ Subclause	Paragraph/ Figure/Table	Type of comment[2]	Comments	Proposed change	Observations of the secretariat
IT39 117		B	3 §	ed	*The tests for presence detection tests are carried out the reference body BA placed on the ground in the middle..* *We suggest to improve the wording*	Modify as follows The tests for presence detection are carried out with the reference body BA placed on the ground in the middle..	Agreed in principal. Daan will modify the figures
IT40 118		G		ed	We suggest to align the wording in the clause Mass moment of inertia → momentum of inertia	Modify as follows Mass moment of inertia → momentum of inertia	Disagreed, term is correct
IT41 119		H		ed	We suggest to check the references in column 'Requirements sub-clause' regarding 'electrical hazards'.	Modify as follows 4.5 → 5.5 4.9 → 5.9	Agreed

1 **MB** = Member body / **NC** = National Committee (enter the ISO 3166 two-letter country code, e.g. CN for China; comments from the ISO/CS editing unit are identified by **)
2 **Type of comment:** **ge** = general **te** = technical **ed** = editorial

Template for comments and secretariat observations

Date: 12/01/2019	Document prEN 17352	Project: 33559
Consultant: Emilio Borzelli	Directive: 2006/42/EC	Sreq: M/396

MB/ NC[1]	Line number (e.g. 17)	Clause/ Subclause (e.g. 3.1)	Paragraph/ Figure/ Table/ (e.g. Table 1)	Type of comment[2]	Comments	Proposed change	Observations of WG9 TG 1 Proposal 2019-06-27 Amsterdam
HAS 1		1	7th §	ge	It is not possible to deal with national requirements in harmonized standards.		Delete the sentence
HAS 2		1	Last §	ge	Delete this paragraph, because all the types and variation of the products dealt with in the standard shall be clearly indicated in the Scope. The Scope and/or the definition of the power operated pedestrian entrance control equipment may be improved to include all the types and variations of these products as needed.		Agree
HAS 3		2		ge	All the normative references should be dated in the whole document.		Agree. Shall be done by the secretary
HAS 4		4	2nd §	ge	This paragraph is too general and cannot be applied to all hazards, hazardous situations and hazardous events, also because the standard deals with all the lifetime phases of the machinery, not only with the normal use.		Agree
HAS 5		4.2, 4.3	Titles	ge	"*crushing, shearing and drawing-in*" are the consequences of the hazards, not the cause of the hazards. The same for "*impact and trapping*". The titles may be changed e.g. to "*Impact and trapping hazards*" or to " *Hazards which can cause impact and trapping*".		Agree
HAS 6		5.1	2nd §	ge	See comment HAS 4. The limit of 2,5 m for the height shall be indicated in the specific requirements when needed.		Agree, 2,5m in 5.2.2
HAS 7		5.1	Last §	ge	This requirement is too general also for a general part of the standard. Moreover it has no added value to the general principles in the MD and is not verifiable.		Delete the sentence

HAS 8		**5.2.1**	**1st §**	**ge**	It is not clear the meaning of "design and construction", but the technical solutions to avoid the hazards by design and construction have the priority and shall be clearly indicated.		**Agree, delete first paragraph and modify second paragraph as following; If crushing, shearing and drawing in hazards exist they shall be safeguarded….**
HAS 9		**5.2.1**	**2nd and 3rd §s**	**ge**	The informative reference "*see 5.2.2*" shall be converted into a normative reference, e.g. "*in accordance with 5.2.2*". The same applies to all the other similar informative references in the other indents. The references to subclause 5.7 are wrong.		**Agree**
HAS 10		**5.2.1**	**4th §**	**ge**	This requirement is in contradiction with the 5th § in subclause 5.2.4.		**Agree, modify 5.2.4. in order to make clear that low energy is only for impact. "additional protective measures against impact"**
HAS 11		**5.2.1**	**5th §**	**ge**	It shall be clearly indicated which are the non-hazardous movements. The opening movements of retractable lanes cannot be non-hazardous movements if there are impact or drawing-in hazards.		**Delete the sentence**
HAS 12		**5.2.2**	**1st §**	**ge**	The requirement "*in accordance with EN ISO 13857 and EN 349*" is too generic without the necessary added value. An acceptable requirement may be a clear normative reference to Figures 1 to 7, if the solutions in these figures are exhaustive.		**Modify the first sentence refering to the drawings. Add sentence: Further safety distances are specified in EN349 and EN13857 (as it is practise in other safety in use standards)**
HAS 13		**5.2.2**	**Last §**	**ge**	Add a cross reference to the relevant parts of clause 7.		**Modify the sentence "the installation instructions in accordance with 7.1"**
HAS 14		**5.2.3**		**ge**	Clarify which are the characteristics of the required guards. Are they fixed guards?		**Agree. Add characteristics for guards; A persons cannot reach any danger point up to 2,5 m above floor level** **They can only be removed or opened with the aid of a tool** **They do not cause additional hazards (e.g. shearing or drawing in)**

HAS 15		**5.2.4**	**5th §**	**ge**	See comment HAS 10.		**Agreed**
HAS 16		**5.2.4**	**Last §**	**ge**	"*angular velocity*" and "*velocity*" should be changed to "*maximum angular velocity*" and "*maximum velocity*".		**Disagree. Formula is just to show how to calculate the values**
HAS 17		**5.3**		**ge**	See comments HAS 8 and HAS 9. The reference to Annex D is wrong.		**Agree. Modify;** **(ESPE) (in accordance with 5.2.5)** **person or an obstacle (in accordance with Annex C)** **mode of operation (in accordance with 5.2.4)**
HAS 18		**5.4**	**1st §**	**ge**	See comment HAS 8.		**Agree. Modify sentence: If Hazards listed in 4.4 exist they shall be safeguarded.**
HAS 19		**5.4**	**2nd §**	**ge**	EN 60335-1 is the part 1 of a multipart standard, and alone cannot conferee the presumption of conformity to MD, moreover it deals with all significant hazards common to household electrical machinery, and a reference to it shall be made to specific relevant parts .		**Agree. Modify; compliance with the relevant requirements of EN 60335 2-103 for electrical safety**
HAS 20		**5.5**	**Note**	**ge**	The content of the Note is normative and shall be moved to the main test appropriately modified.		**Agree**
HAS 21		**5.6**		**ge**	Change the references to subclause 5.3 to references to subclause 5.4. The informative reference to subclause 5.4 in the first indent of the third paragraph shall be changed to a normative reference.		**Agree**
HAS 22		**5.7**	**1st §**	**ge**	Change the references to subclause 4.8 to references to subclause 4.7.		**Agree**
HAS 23		**5.7**	**2nd §**	**ge**	Add a cross reference to the relevant parts of clause 7.		**Agree**
HAS 24		**5.7**	**4th §**	**ge**	The standard shall provide requirements only for the manufacturer of the product.		**Agree. Delete the sentence**

HAS 25		**5.7**	**7th §**	**ge**	Which are the measures to be taken to prevent unintentional disengagement of components or parts during use?		**Delete sentences: Measures shall be taken to prevent unintentional disengagement or mechanical damages of the cabinet frame during use.** **Measures shall be taken to prevent unintentional disengagement of components or parts during use.**
HAS 26		**5.7**	**Last but one §**	**ge**	What is a break out function?		**Add definition in 3.13** **3. Break out:** **System whereby elements (e.g. bars, glass elements etc.) of a power operated pedestrian entrance control equipment can be pushed manually to open the escape way**
HAS 27		**5.7**	**Last §**	**ge**	Which is the function of the roof? Why its strength may depend only on a declaration of the manufacturer?		**Delete the sentence**
HAS 28		**5.8, 5.9, 5.10, 5.11**	**1st §**	**ge**	What is the meaning of "*by design and construction*"? Verify the possibility to replace the sentence e.g. by "*as following*", or to delete the paragraph.		**Replace by design and construction by "as following"**
HAS 29		**5.8**	**2nd §**	**ge**	The requirement shall be precise: the references to the standards cannot be given as examples.		**Delete "examples of"**
HAS 30		**5.8**	**Last §**	**ge**	How much shall it be chamfered?		**a chamfer with a minimum of 1 x 1 mm**
HAS 31		**5.11**	**2nd §**	**ge**	See comment above and provide requirements for the alternative protections (how shall be the profiles and which are the similar protections?).		**Agreed to delete the last part of the sentence as edges with protecting profiles are not longer accessible edges.**
HAS 32		**5.11**	**3rd §**	**ge**	Why only the top corners shall be protected, instead of all accessible corners? How to protect the corners?		**Agreed. Modify; Accessible corners of leaf of retractable lanes and swing lanes shall either be rounded with a radius of ≥ 10mm or shall be protected with flexible material (e.g. foam or rubbers) (see Figures 5, 6 and 7).**

HAS 33		**6.1**	**1st §**	**ge**	The instructions are only for the users of the final product.		**Agreed Modify "specified by the manufacturer"**
HAS 34		**6.2.1**		**ge**	All the informative references such as "see 6.2.4" shall be changed to normative references, e.g. "according to 6.2.4".		**Agreed**
HAS 35		**6.8, 6.9**		**ge**	I think that the tests are functional tests.		**Disagree for 6.8. This is not a functional test. Agree for 6.9. Delete by inspection**
HAS 36		**7**	**GENERAL**	**ge**	"Information for use" consists of all the means to convey information to the user: signs and markings on the machinery, signals, warning devices and accompanying documents, such as instruction handbook. If warning signs are needed, it shall be clearly indicated, and specific requirements should be provided in an additional subclause. A general introduction with a reference to 6.4 of EN ISO 12100:2010 is missing, e.g. as the following: "**7.1 General** Information for use shall be provided in accordance with EN ISO 12100:2010, 6.4."		**Agree. Add 7.1 General** **Information for use shall be provided in accordance with EN ISO 12100:2010, 6.4**
HAS 37		**7.1**		**ge**	This subclause deals mainly with the instruction handbook, and the title should be "***Instruction handbook***". Too many terms are used to indicate the instruction handbook, such as *information, information for use, user instruction, user manual*.		**Agree. Use instruction handbook.**
HAS 38		**7.1**	**2nd §**	**ge**	The instruction handbook cannot be supplied only in electronic form, according to the "Guide to application of the Machinery Directive 2006/42/EC".		**Agree. Delete: 2§ and 3§**

HAS 39		**Annex A**		**ge**	A normative Annex shall be referred to in a specific requirement to be provided in clause 5. It should be indicated also in the Scope that the use of the power operated pedestrian entrance control equipment dealt with is extended to the escape routes and emergency exits.		**Add a paragraph 5.12 use in emergency and escape exits** **Power operated pedestrian entrance control equipment to be used in escape routes and emergency exits shall fulfil the requirements of annex A** **Add in 2§ of the scope: emergency exits**
HAS 40		**Annex A**	**Note 1**	**ge**	The Note should be deleted but the indication that this Annex A provides additional requirements for the power operated pedestrian entrance control equipment used in escape routes and emergency exits shall be moved into A.1.		**Agreed**
HAS 41		**Annex A**	**Note 2**	**ge**	It is not possible to deal with national requirements in harmonized standards, but a Note is only an informative part of the document and, only if strictly necessary, it may remain, but it should be moved under A.1.		**Agreed**
HAS 42		**Annex A**	**A.1**	**ge**	The break out function should be defined. See also comment HAS 26.		**Agreed. Definition added**
HAS 43		**Annex A**	**A.3**	**ge**	It should be clarified if an operating mode selector is required, and which is its function. All the references to B.7 should be changed to references to A.7.		**Delete the sentence**
HAS 44		**Annex A**	**A.4**	**ge**	References to B.5 and B.6 shall be changed to references to A.5 and A.6.		**Agree**
HAS 45		**Annex B**	**1st §**	**ge**	In subclauses 5.2.5 and 6.2.5 there is no limit for the technologies used in the required ESPE. This Annex is referred to for the testing procedures to be used as verification of the requirements in 5.2.5, and not as a guide. Modify the document accordingly.		**Agree. Modify Annex to make it general**
HAS 46		**Annex B**	**Last §**	**ge**	References to Figures B.5 and B.7 should be changed to references to Figures B.2 and B.3.		**Agreed**
HAS 47		**Annex**		**ge**	This Annex is confusing: most of the references to the Figures are wrong. There is no reference to Figure C.1. The description of the measuring equipment is unclear and the figure of the measuring device does not help.		**Agreed. Modify: "…profile shown in Figure C.1"** **Description of measuring equipment is same as in EN 12453 and EN 16005**

HAS 48		**Annex H**	**1st and 2nd §s**	**ge**	The Annex H gives the relationship between the hazards listed in clause 4 and the relevant requirements and test method subclauses of this document. The list of significant hazards in clause 4 is not strictly based on the list of significant hazards in EN ISO 12100 . Therefore I suggest to change the first two paragraphs e.g. to the following "*This annex contains a cross-reference between the significant hazards, hazardous situations and events listed in clause 4 and the relevant requirements and test method subclauses*".		**Agreed**
HAS 49		**Annex H**	**Table H.1**	**ge**	Hazards indicated in subclauses 4.5 and 4.9, as described in these subclauses, are mechanical hazards. Hazards indicated in subclause 4.4, as described in this subclause, are also fire, thermal and mechanical hazards. Hazards indicated in subclause 4.6 , as described in this subclause, are also mechanical hazards.		**Agreed**
HAS 50		**Annex H**	**Table ZA.1, 3rd column**	**ed**	Change 4.4, 4.5, 4.9 and 4.6 to 5.4, 5.5, 5.9 and 5.6.		**Agreed**
HAS 51		**Annex ZA**	**Table ZA.1**	**ge**	The EC no longer accepts the options A and B for Annex Z, but only the option C (*see CEN Guide 414: 2017, 6.10.3.3.2*). A detailed correspondence between the essential requirements of MD and the relevant clauses/subclauses of the standard shall be provided.		**To be discussed with the convenor Olaf for an example**